92X SPECTRUM MASTER™

Hardware Manual

Includes Automatic Pole-Zero Circuit
U.S. Patent No. 4,866,400

Printed in U.S.A.

EG&G ORTEC Part No. 761810
Rev. E

3934 0191

CONTENTS

LIST OF FIGURES iv

WARRANTY v

PHOTOGRAPH vi

1. DESCRIPTION 1
   1.1. INTRODUCTION 1
   1.2. INTENDED AUDIENCE 1

2. SPECIFICATIONS 2
   2.1. HARDWARE 2
   2.2. INPUTS AND OUTPUTS 4
   2.3. ELECTRICAL AND MECHANICAL 4

3. INSTALLATION 5
   3.1. BASIC SYSTEM SETUP 5
   3.1.1. Setting the ac Line Voltage 5
   3.1.2. Dual-Port Memory Interface Installation 5
   3.1.3. IBM PC/XT/AT or PS/2 Model 30 Interface Card Installation 5
   3.1.4. IBM PS/2 MODEL 50/60/80 Interface Card Installation 6
   3.1.5. Setting Bias Supply Polarity and Voltage 7
   3.1.6. Setting Amplifier Polarity 7
   3.1.7. Cabling up a System 8
   3.2. ADVANCED FEATURES SETUP 9
   3.2.1. Setting Up a Multiple MCB System 9
   3.2.2. Setting Up Serial Communication 10
   3.2.3. DIP SWITCH Settings 11

4. TROUBLESHOOTING GUIDE 13

APPENDIX A: 92X SHARED MEMORY INTERFACE 15
   Page Select Port 15
   Data Memory Organization 15
   Mailbox Organization 15
   Mailbox Protocol 16

APPENDIX B: COMMANDS AND RESPONSES 17
   Command Records 17
   Percent Response Records 18
   Dollar Response Records 19
   Command Catalog 20

APPENDIX C: PROGRAM EXAMPLES 41

APPENDIX D: AUTOMATIC POLE-ZERO 49

APPENDIX E: DIGITAL SPECTRUM STABILIZATION 50
   Point Mode Stabilization 50
   Gauss Mode Correction 50

APPENDIX F: COMPATIBILITY WITH 917/918A 51
918A-OPT B Modifications for 919/92X Compatibility 51
918A-OPT E Modifications for 919/92X Compatibility 52
918A-OPT 5 Modifications for 919/92X Compatibility 52

GLOSSARY 53

INDEX 55

LIST OF FIGURES

Fig. 3.1. Location of High-Voltage Polarity Jumper 8
Fig. 3.2. Location of Amplifier Polarity Switch 9
Fig. 3.3. Standard System Interconnections 9
Fig. 3.4. Exposing the Dual-Port Memory Address Pins 10
Fig. F.1. Component Assembly for 918-OPT B. 51
Fig. F.2. Revision to 918-OPT 5 for 92X Compatibility. 52

Standard Warranty
for
EG&G ORTEC Instruments

EG&G ORTEC warrants that the items will be delivered free from defects in material or workmanship. EG&G ORTEC makes no other warranties, express or implied, and specifically **NO WARRANTY OF MERCHANTABILITY OR FITNESS FOR A PARTICULAR PURPOSE.**

EG&G ORTEC's exclusive liability is limited to repairing or replacing at EG&G ORTEC's option, items found by EG&G ORTEC to be defective in workmanship or materials within **one year** from the date of delivery. EG&G ORTEC's liability on any claim of any kind, including negligence, loss, or damages arising out of, connected with, or from the performance or breach thereof, or from the manufacture, sale, delivery, resale, repair, or use of any item or services covered by this agreement or purchase order, shall in no case exceed the price allocable to the item or service furnished or any part thereof that gives rise to the claim. In the event EG&G ORTEC fails to manufacture or deliver items called for in this agreement or purchase order, EG&G ORTEC's exclusive liability and buyer's exclusive remedy shall be release of the buyer from the obligation to pay the purchase price. In no event shall EG&G ORTEC be liable for special or consequential damages.

Quality Control

Before being approved for shipment, each EG&G ORTEC instrument must pass a stringent set of quality control tests designed to expose any flaws in materials or workmanship. Permanent records of these tests are maintained for use in warranty repair and as a source of statistical information for design improvements.

Repair Service

If it becomes necessary to return this instrument for repair, it is essential that Customer Services be contacted in advance of its return so that a Return Authorization Number can be assigned to the unit. Also, EG&G ORTEC must be informed, either in writing, by telephone [(423) 482-4411], or by facsimile transmission [(423) 483-0396], of the nature of the fault of the instrument being returned and of the model, serial, and revision ("Rev" on rear panel) numbers. Failure to do so may cause unnecessary delays in getting the unit repaired. The EG&G ORTEC standard procedure requires that instruments returned for repair pass the same quality control tests that are used for new-production instruments. Instruments that are returned should be packed so that they will withstand normal transit handling and must be shipped **PREPAID** via Air Parcel Post or United Parcel Service to the nearest EG&G ORTEC repair center. The address label and the package should include the Return Authorization Number assigned. Instruments being returned that are damaged in transit due to inadequate packing will be repaired at the sender's expense, and it will be the sender's responsibility to make claim with the shipper. Instruments not in warranty will be repaired at the standard charge unless they have been grossly misused or mishandled, in which case the user will be notified prior to the repair being done. A quotation will be sent with the notification.

Damage in Transit

Shipments should be examined immediately upon receipt for evidence of external or concealed damage. The carrier making delivery should be notified immediately of any such damage, since the carrier is normally liable for damage in shipment. Packing materials, waybills, and other such documentation should be preserved in order to establish claims. After such notification to the carrier, please notify EG&G ORTEC of the circumstances so that assistance can be provided in making damage claims and in providing replacement equipment, if necessary.

92X
MASTER
HIGH VOLTAGE
AMPLIFIER
ADC
STABILIZER
Spectrum MASTER
EG&G ORTEC

1. DESCRIPTION

1.1. INTRODUCTION

The EG&G ORTEC 92X SPECTRUM MASTER™ integrated spectroscopy system is a stand-alone instrument designed for high-performance data acquisition in Nuclear Spectroscopy applications. The 92X is a hardware component of the EG&G ORTEC ADCAM® architecture of Advanced Data Collection and Management, in which a personal computer is interfaced to a task-specific hardware system, with the functions of data acquisition/storage and display/analysis shared between the special hardware and PC-based software, respectively.

The 92X SPECTRUM MASTER, in a single, integrated package, provides all the functionality required to support a single HPGe or NaI/PMT detector system in a gamma spectroscopy application. Provision is made for the support of multiple 92X systems, or other ADCAM architecture products, on the same PC.

The 92X provides the following functions:

Amplifier with computer-controlled gain, fine gain and shaping time, with a computer-controlled version of ORTEC's patented (U.S.A. Patent No. 4,866,400) automatic pole-zero adjustment circuit. Setup and adjustment are fast, simple, and reproducible. No screwdriver or oscilloscope is required. Pulse Shaping is by state-of-the-art triangular filter method.[1] Automatic baseline restoration, pile-up rejection, and dead time correction circuits for the best possible spectral fidelity are provided. The highly accurate Gedcke-Hale dead time correction technique is employed.[2]

Bias Supply with high-voltage Enable/Disable under the control of the computer. The detector is protected, in the event that the liquid nitrogen is exhausted, via an interlock, which is monitored by the computer to provide the user with an indication of the detector's status. Polarity and voltage can be monitored from the computer; however, they are set manually to provided added security.

Digital Spectrum Stabilizer, which ensures spectral stability over long counting periods and wide ranges of count-rate and temperature.

ADC - high-speed, successive approximation type with a fixed 7-μs conversion time, with 16K channels.

Data Memory - non-volatile data memory of 16,384 channels and $2^{31}-1$ counts per channel is provided.

I/O Port - TTL IN/TTL OUT primarily intended to facilitate interfacing to sample changers.

In summary, the 92X SPECTRUM MASTER represents a high-performance integrated package for Germanium Detector Gamma-Ray Spectroscopy.

1.2. INTENDED AUDIENCE

This manual is intended to be used for the initial setup and installation of the 92X hardware. Refer to the MAESTRO II REFERENCE MANUAL for information on installation of the software. Section 1 of this manual gives a brief introduction to what can be found inside the 92X system. Section 2 gives specifications of the system which are listed in the data sheet, along with a more detailed listing of the inputs and outputs (Section 2.2). Section 3.1 describes the BASIC SYSTEM SETUP, the steps that must be performed for all 92X systems. Section 3.2 covers the setup of some of the more advanced features of the 92X system; most users can ignore the information in this section. Section 4 gives some troubleshooting information designed to point out possible causes for some potential problems. The Appendices are intended for the user who wishes to write custom software to control the 92X SPECTRUM MASTER. These sections explain the commands used to control the system, along with sample programs and explanations of the interfaces and protocol.

---

[1] F. S. Goulding, D. A. Landis, and N. W. Madden, "Design Philosophy for High Resolution, Rate and Throughput," Transactions on Nuclear Science NS30 (Feb. 1983), No. 1, pp. 301–310.

[2] Ron Jenkins, R. W. Gould, and Dale Gedcke, Quantitative X-Ray Spectrometry (New York: Marcel Dekker, Inc.), 1981, pp. 266–267.

2. SPECIFICATIONS

2.1. HARDWARE

BIAS SUPPLY 0 to ±5000 V, continuously variable by potentiometer with an output current between 0 and 100 μA; or, ±1500 V, continuously variable by a potentiometer with an output current between 0 and 500 μA.

Current 0 to 100 μA maximum.

Enable/Disable By COMPUTER CONTROL

Inputs Remote shutdown; rear-panel BNC connector; compatible with bias shutdown output from all EG&G ORTEC and most other manufacturers' detectors; computer sensed.

Outputs 0-5 kV (Z_o = 2 MΩ) SHV connector, computer sensed.

Indicators (front panel) LEDs for: bias polarity, HV On/Off, and bias supply overload.

AMPLIFIER

Gain 4 to 1000 CONTINUOUSLY ADJUSTABLE FROM COMPUTER; minimum gain step = 1/4,000.

Shaping Time Constants COMPUTER SELECTABLE for 2- or 6-μs triangular filter shaping. (See Table 1.)

Integral Nonlinearity <±0.025% from 0 to 10 V.

Noise Equivalent input noise <4.5-μV RMS at 6-μs shaping for gains >100.

Temperature Coefficient <±0.005%/°C for gain and <±7.5 μV/°C for dc level, 0 to 50°C.

Overload Recovery At maximum gain, recovers to within 2% of rated output from X1000 overload in 2.5 non-overload pulse widths.

Spectrum Broadening Typically <8% broadening of the FWHM for count-rates up to 100,000 counts per second, measured on the 1.33-MeV ^{60}Co line using EG&G ORTEC GAMMA-X-PLUS 10% efficiency detector.

Spectrum Shift (Stabilizer inactive) typically <±0.018% for count rates up to 100,000 counts per second, measured as in the Spectrum Broadening specification.

Pulse Pile-Up Rejector AUTOMATICALLY SET THRESHOLD. Pulse pair resolution typically 500 ns.

Automatic Pole-Zero Circuit COMPUTER CONTROLLED.

Inputs

INPUT rear-panel BNC connector Accepts preamplifier signals of either polarity, with rise times less than the selected shaping time and exponential decay time constants in the range 40 μs to infinity (including transistor-reset preamplifiers). Input impedance >500 Ω. Input is dc coupled and protected to ±25 V.

TRP INH rear-panel BNC input connector Accepts reset signals from transistor-reset preamplifiers or pulsed optical feedback preamplifiers. Positive NIM logic or TTL levels can be used. Inhibit input initiates the protection against distortions caused by preamplifier reset. This includes turning off the baseline restorers, monitoring the negative overload recovery at the unipolar output, and generating the pile-up reject and busy signals for the duration of the overload. These last two signals are used internally to provide information to the dead time correction circuitry.

Table 1. Unipolar Pulse Shape Parameters for Triangular and Gaussian Pulse Shapes

Time Interval	Shaping Time Multiplier[a]	
	Triangular	Gaussian
From start of input pulse to maximum amplitude of unipolar output pulse	2.6	2.8
Rise of output pulse from 0.1% to maximum amplitude	2.4	2.0
Width of output pulse at 50% of maximum amplitude	2.5	2.0
Width of output pulse at 1% of maximum amplitude	5.6	5.0
Width of output pulse at 0.1% of maximum amplitude	6.9	6.3

[a]Time interval equals the selected front-panel SHAPING TIME multiplied by the Shaping Time Multiplier.

Outputs
OUTPUT rear-panel BNC Provides positive unipolar pulses with a linear range 0 to +10 V. Output impedance <1 Ω. This output is intended for test purposes. The amplifier-to-ADC connection, including all pile-up reject/dead time correction connections, is made internally.

Controls
PZ CLAMP rear-panel push button Inserts a diode-clamp circuit is series with AMP OUTPUT for oscilloscope examination of PZ adjustment. Diode clamp prevents possible oscilloscope overload and subsequent pulse distortion.

Indicators (front panel)
PZ BUSY Illuminates when the AUTO PZ circuit is activated from the computer.

Accept/Reject LED Multicolor LED indicates percentage of pulses rejected because of pulse pile-up. LED color: green for 0-40%, yellow for 40 to 70%, and red for >70% rejection.

DC

Successive Approximation ADC with Sliding Scale Linearization 16,000-channel resolution; SOFTWARE SELECTABLE as 16K, 8K, 4K, 2K, 1K, 512 channels.

Conversion Time Per Event <7 μs, fixed.

Integral Nonlinearity ≤0.025% over 99% dynamic range.

Differential Nonlinearity ≤±1%.

Gain Instability ≤50 ppm/°C.

Dead Time Correction Extended live time correction according to Gedcke-Hale method.

Connectors
Internal Connections are made between amplifier and ADC for linear signal and pile-up reject, and amplifier busy.
ADC Gate (rear panel) BNC Connector Slow positive NIM input; Computer selectable; Coincidence or Anticoincidence. Signal must occur prior to and extend 0.5 μs beyond peak detect.

Controls (rear panel)
LLD Screwdriver potentiometer 0 to 50% full scale.
Zero Screwdriver potentiometer ±250 mV.

Indicators (front panel)
ADC BUSY LED Flashes once for each pulse digitized by ADC.

%DEAD TIME 10-segment LED bar graph reads one segment for each 10% dead time.

DATA MEMORY 16,384 channels of NON-volatile data memory; 2^{31}-1 counts per channel (over 2 billion).

PRESETS

Real/Live Time In multiples of 20 ms.

Region of Interest Peak Count

Region of Interest Integral count settable to a maximum value of 2^{32}-1 (over 4 billion).

Data Overflow Terminates acquisition when data in any channel exceeds 2^{31}-1 counts.

DIGITAL SPECTRUM STABILIZER

ADC Data Word Size 14 bits (16K channels) maximum.

Stabilization Peak centroid (zero and gain) channel 2 to 16384; stabilization window width (zero and gain) ±1 to ±256 channels.

Zero Correction Resolution 50 μV (from -25 mV to +25 mV in 1024 steps).

Gain Correction Resolution 0.00025% (from 99.5% to 100.5% in 4096 steps).

Setup/Enable/Disable Via COMPUTER.

Indicators (front panel)
STABILIZER ACTIVE LED Indicates when stabilizer is active.

MICROPROCESSOR

INTEL 80186 64K RAM with battery backup; 16K "scratchpad" memory with battery backup; 64K program memory (EPROM); 8K mailbox memory; and time-of-day clock with battery backup.

INTERFACE CONNECTORS

EG&G ORTEC Dual-Port Memory Interface Bus Connector 37-pin D connector.

SERIAL Standard RS-232-C, 25-pin; male wired as DTE to run at 38.4K baud max, with modem control.

PREAMP Power Connector 9-pin D connector provides ±24 and ±12 V as power for associated preamplifier.

SAMPLE CHANGER CONNECTORS

Change Sample and Sample Ready BNC rear-panel connectors for change sample and sample ready, respectively; SOFTWARE ADDRESSABLE.

Front-Panel Indicator

μP BUSY LED Visual indicator of the microprocessor activity; brightness increases as processor activity increases.

2.2. INPUTS AND OUTPUTS

This section of the manual describes more fully the various inputs and outputs on the 92X.

SAMPLE CHANGER INPUT/OUTPUT

The sample changer input/output are actually a TTL output and a TTL input that can be used to control many external devices. The input can be polled by sending the SHOW_INPUT command. (See Appendix B for information on commands.) The sample changer output can be set with the SET_OUTPUT command, or it can be pulsed with the STEP_OUTPUT command.

ADC GATE INPUT

The ADC GATE INPUT can be used to prevent specific pulses from being converted. The ADC GATE INPUT can be programmed to be ignored, anticoincident, or coincident. If gate is in coincident mode, a positive TTL signal (2.5 — 5 V) must be present on the input 0.5 μs before the peak of the pulse and must extend 0.5 μs after the peak of the pulse for a pulse to be accepted by the ADC. Otherwise, the pulse is not converted. If the gate is in anticoincident mode, a negative TTL signal (0 — 0.8 V) must be present at the gate input 0.5 μs before the peak of the pulse and must extend 0.5 μs after the peak of the pulse for a pulse to be converted. Otherwise, the pulse is rejected. The GATE INPUT has NO effect on the live time correction circuitry.

REMOTE SHUTDOWN

The REMOTE SHUTDOWN input on the rear panel is used to turn off the bias supply voltage in the event that the detector warms up. This remote shutdown is compatible with any EG&G ORTEC detector. The remote shutdown MUST be connected to the BIAS SHUTDOWN of the detector, or the high voltage will not turn on. If you are using a detector with an incompatible shutdown circuit, this feature can be defeated by placing a 100-, 50-, or 0-Ω terminator on the REMOTE SHUTDOWN input.

The REMOTE SHUTDOWN input has the following properties:

An open circuit applied to the REMOTE SHUTDOWN input indicates a warm detector; therefore, the high voltage is turned off. Drawing a current of 500 μA from the REMOTE SHUTDOWN input indicates a cool detector; therefore,the high voltage can be turned on.

The REMOTE SHUTDOWN input is clamped at -700 mV by an internal clamp.

AMPLIFIER INPUT

The amplifier input accepts preamplifier pulses of either polarity with rise times less than the selected shaping time and exponential decay time constants in the range 40 μs to infinity.

TRP INHIBIT

Accepts reset signals from transistor-reset preamplifiers or pulsed optical feedback preamplifiers. Positive NIM logic or TTL levels can be used. Inhibit input initiates the protection against distortions caused by preamplifier reset. This includes turning off the baseline restorers, monitoring the negative overload recovery at the unipolar output, and generating the pile-up reject and busy signals for the duration of the overload. These last two signals are used internally to provide information to the dead time correction circuitry.

AMPLIFIER OUTPUT

The amplifier output on the rear panel of the 92X is provided for test purposes. The amplifier output is identical to the input to the ADC. The pole-zero (PZ) clamp push button can be used to clamp the output so that the PZ cancellation of the amplifier can be checked easily without overloading the input of an oscilloscope.

2.3. ELECTRICAL AND MECHANICAL

DIMENSIONS 14 × 31 × 35 cm (5-1/2 × 12-1/8 × 13-3/4 in.).

WEIGHT 8.5 kg (19 lb).

POWER INPUT 110/220-V ac, 50/60 Hz.

POWER CONSUMPTION 95-W input power.

OPERATING ENVIRONMENT Same as for IBM PC: 16° to 32°C (60° to 90°F), 8% — 80% relative humidity.

3. INSTALLATION

3.1. BASIC SYSTEM SETUP

This section describes the steps that must be taken to set up a standard 92X SPECTRUM MASTER system. The necessary steps include selection of ac line voltage, installation of the Dual-Port Memory interface, changing the voltage and polarity of the bias supply, changing the polarity of the amplifier, and cabling to a detector.

3.1.1. Setting the ac Line Voltage

The 92X is equipped to handle many different ac line voltages, allowing it to be useful around the world. When the 92X is shipped from the factory, it is normally set for 120 V ac operation, the standard for U.S.A. If a voltage other than 120 V ac is to be used, the ac power block and fuse must be set for the correct voltage and current ratings. To change the ac line voltage, do the following:

1. Turn OFF the power to the 92X and remove the ac line cord.
2. Slide the clear plastic window from its operating position (over the fuse) to its alternate position over the ac power plug connector.
3. Remove the fuse by pulling outward on the handle marked "Fuse Pull."
4. Extract the small printed wiring card below the fuse.
5. Orient the card so that the desired voltage is readable when the card is inserted into the slot; the selections are 100, 120, 220, and 240.
6. Insert the card back into the slot under the fuse location, return the "fuse pull" to its original position, and check to see if desired voltage is visible.
7. Install a 2-A fuse for 100 V or 120 V. Install a 1-A fuse for 220 V or 240 V.

3.1.2. Dual-Port Memory Interface Installation

The Dual-Port Memory Interface is the standard method of communication with the host computer. The dual-port interface gives the computer direct access to the data memory in the 92X. Therefore, a "live" display can be displayed on the computer screen because there are no communication delays when new data is displayed on the screen. The ADCAM/IBM Interface card is the card that plugs into the host computer to give it access to the data memory.

If the 92X is part of a multiple MCB system, read the information in Section 3.2.1, Setting Up a Multiple MCB System, to set the switches on the interface card before installing the card. If the 92X is the only MCB in the system, the hardware as sent from the factory will have the correct settings for installation.

If the host computer is a PS/2 Model 50, 60, 80 or compatible, skip to Section 3.1.4. Otherwise, follow the instructions in Section 3.1.3, below.

3.1.3. IBM PC/XT/AT or PS/2 Model 30 Interface Card Installation

This section describes how to install a 918A-OPTION-B (ADCAM/IBM INTERFACE CARD) in an IBM PC, XT, AT or compatible. [Model 918A-OPT B is usually supplied, along with the 10-ft dual-port memory cable (918A-OPT C) under the model number PCBCBL1, or PCBCBLN for multiple MCBs.] A 92X that is purchased with an 918A-OPTION-B will operate with the 92X without modification. If the 92X is to be used with an existing 918A-OPTION-B, the 918A-OPTION-B must be "Rev. A" or later for proper operation. If the 92X is to be used with and older 918A-OPTION-B, see Appendix F for further details.

To install the 918A-OPTION-B, do the following:

<u>First, turn off the PC's power and remove the power cord to avoid damage to the computer.</u>

Then follow the instructions below to install the interface card:

1. Remove the cover of the PC. Using a small flat-blade screwdriver, loosen and remove the retaining screws on the back of the computer and slide the cover forward to reveal the I/O slots.
2. Choose an unused slot in the IBM PC and remove the cover of the vertical opening immediately behind the slot. The slot nearest the power supply in a PC XT is specially wired and cannot be used for the dual-port memory.
3. Orient the interface card so that the gold connectors are facing down and to the rear of the machine. Press down gently, but firmly, to seat the card in the I/O slot. Mark the outside of the chassis to indicate the device installed.
4. With the card firmly seated in the slot, insert and replace small screw in the option slot cover.
5. Replace the computer cover and retaining screws.
6. Attach the Dual-Port Memory (DPM) cable to the 37-pin 'D' connector on the interface card's rear panel. Do not confuse the DPM connector with the IBM

disk controller connector; they appear identical from the rear of the computer.

3.1.4. IBM PS/2 MODEL 50/60/80 Interface Card Installation

This section describes how to install and configure the EG&G ORTEC PS/2-to-ADCAM interface card (Model 918A-OPTION-E) for use with the IBM PS/2 Model 50, Model 60, and Model 80 Personal Computers and other compatible computers. [Model 918A-OPT E is usually supplied, along with the 10-ft dual-port memory cable (918A-OPT C) under the model number MABCBL1, or MABCBLN for multiple MCBs.]

The PS/2-to-ADCAM interface hardware is designed to be compatible with the IBM PS/2 POS (Programmable Option Select) rules. The board identifier number (6667) has been registered with IBM, and no conflict with any other manufacturer's products should arise.

Along with the interface card, you received a utility software disk containing an adapter descriptor file (@6667.ADF) that must be copied onto your setup disk before installation (refer to the Copy an Option Diskette Utility in the Personal System/2 reference manual). If you are not familiar with the procedure of installing adapter boards, or if this the first board to be installed in your PS/2, please perform the following installation steps carefully:

1. MAKING A BACKUP COPY OF YOUR REFERENCE DISK. You will need an unformatted high-density diskette to complete this step. Turn off the computer and insert the Model XX Reference Diskette that came with your computer into drive A. Turn on the computer and wait for the IBM logo, then press ENTER. Select option 2 (Backup the Reference Diskette) and follow instructions. This multi-step process requires your participation and will take a few minutes. The reason for this is that the original Reference Diskette is write-protected, and you cannot copy any .ADF files onto it.

2. COPYING THE .ADF FILE TO THE REFERENCE DISKETTE. After you have made the backup copy of the Reference diskette, which is not write-protected, and you have received the "copy complete.." message, leave your backup copy in the drive and press ENTER. Next, select option 5 on the menu (Copy an Option Diskette) and press ENTER. When told to do so, remove the backup Reference Diskette from drive, insert the diskette that you received with the PS/2-to-ADCAM interface board into drive A, and press ENTER. You will be instructed when to replace the backup Reference Diskette. Follow instructions by pressing ENTER until you are returned to the Main Menu. When you are returned to the main menu, instead of pressing ESC to quit, simply turn off the computer, leaving the updated backup diskette in drive A.

3. SET JUMPER W1 TO THE 92X SETTING. The 918A-OPTION-E interface board includes one jumper labeled W1. When the board is viewed with the cable connector to the right, the jumper should be on the two left pins.

4. INSTALLING THE ADCAM/IBM ADAPTER BOARD. THE COMPUTER MUST BE TURNED OFF FOR THIS STEP. Remove the computer cover. Refer to SYSTEM UNIT COVER REMOVAL in the QUICK REFERENCE manual supplied with your computer. Select the option slot that you want to use and remove the blank adapter plate by loosening the external knurled screw at its base. Now slide the plate up and out.

   MAKE SURE POWER IS OFF. Insert the PS/2-to-ADCAM adapter board into the computer, making sure that the gold edge connector and the back adapter plate are aligned with the card edge connector and the adapter plate screw before exerting pressure on the board. Seat the board correctly and tighten the adapter plate screw. Reinstall the computer cover.

5. Turn on the computer with your updated backup Reference Diskette in drive A. If a '165' error appears on your screen, press the "F1" key. The Setup program will then boot and the IBM logo will appear. Press ENTER and you will see an explanation of error 165 (Adapter Configuration Error). This is all normal, the computer has recognized a change in the configuration. Press "Pg Dn" to get the second page of the menu. Select "yes" for "automatically configure the system?". When the message "Automatic configuration complete" is displayed, remove the backup Reference Diskette from drive A. If a hard disk is present, press ENTER to reboot the computer. If no hard disk is present, insert a system disk in drive A and press ENTER to reboot the computer.

6. The PS/2-to-ADCAM adapter is now configured with the Dual-Port data memory mapped into page D (hex address d0000-dffff) and uses the I/O port hex 292.

7. Connect the data cable from the PS/2-to-ADCAM adapter to the 92X, and the system will be ready to run the MCA emulation software program.

If some step was inadvertently skipped during the setup procedure, the following problems are the most likely to be encountered:

1. Error 165 is displayed on your computer after installation. This means that your computer still does not recognize the adapter board. Repeat the installation procedure. You will receive this error on removal of a correctly installed board, and you will have to repeat the configuration procedure.
2. You see an asterisk (*) by the selection made and a "Conflict" message. This means that the computer has discovered a conflict between two adapters, such as the same I/O or Memory addresses. Select another address for one of the adapters.
3. Setup cannot find the appropriate .ADF file. Make sure that the @6667.ADF file has been copied to the backup Reference Diskette.
4. Communication errors occur when MAESTRO program is run. Jumper W1 may not be in the correct position. Ensure that jumper W1 on the 918A-OPTION-E board is set to the left.

Whenever an error occurs, the configuration program will shut down the offending adapter board. So, unless the configuration was successful, it is useless to try to communicate with the adapter board. Also, the computer will not boot from the hard disk until the computer has been successfully configured.

3.1.5. Setting Bias Supply Polarity and Voltage

The high-voltage bias supply polarity, High/Low position, and voltage must be set manually before use.

The voltage is set with the dial potentiometer on the rear panel of the unit. The dial reads in kV, so the dial must be set to 3.20 to get 3200 V of bias voltage. Set the dial to the appropriate value for your detector and lock it into place with the lever at the edge of the dial.

Positive/High voltage is the normal polarity setting when a 92X is shipped from the factory. However, this should be checked before the supply is connected to a detector or powered up. To check the polarity setting of the high-voltage supply, disconnect any cable from the high-voltage output on the rear panel and turn on the power to the 92X unit. The front-panel polarity indicator will show which polarity is selected. Increase the dial potentiometer to 5.0. If the bias voltage goes only up to <3 kV, the supply is in the Low position. If the polarity is correct for your detector, then nothing must be done. If the polarity or High/Low setting is incorrect, do the following:

WARNING: HIGH VOLTAGES ARE PRESENT INSIDE THE 92X UNIT WHEN AC POWER IS APPLIED. THE 92X SHOULD BE TURNED OFF AND UNPLUGGED ANY TIME THE COVER IS REMOVED.

1. Turn OFF the power to the 92X and disconnect the power cord from the outlet. WAIT for at least 1 minute so that all of the high-voltage capacitors can discharge before continuing.
2. Remove the four screws that hold the top cover of the 92X in place and remove the top cover.
3. Rotate the unit so that the front panel is to your right.
4. Locate the high-voltage polarity jumper board. The polarity jumper board is located on the edge of bottom board in the stack of boards. See Fig. 3.1.
5. Carefully, lift the jumper board until it is free of the board below and remove the jumper board.
6. Make the setting as shown in Fig. 3.1.
7. Press the board firmly into the sockets below.
8. Replace the cover and the four screws that hold it in place.
9. Repeat the steps outlined previously to determine the polarity and High/Low settings of the supply to ensure that the proper settings were made.

3.1.6. Setting Amplifier Polarity

In most applications where a germanium detector is used, the amplifier polarity is identical to the high-voltage polarity. The polarity of the amplifier must therefore change when the high-voltage polarity is changed. To change the polarity of the amplifier do the following:

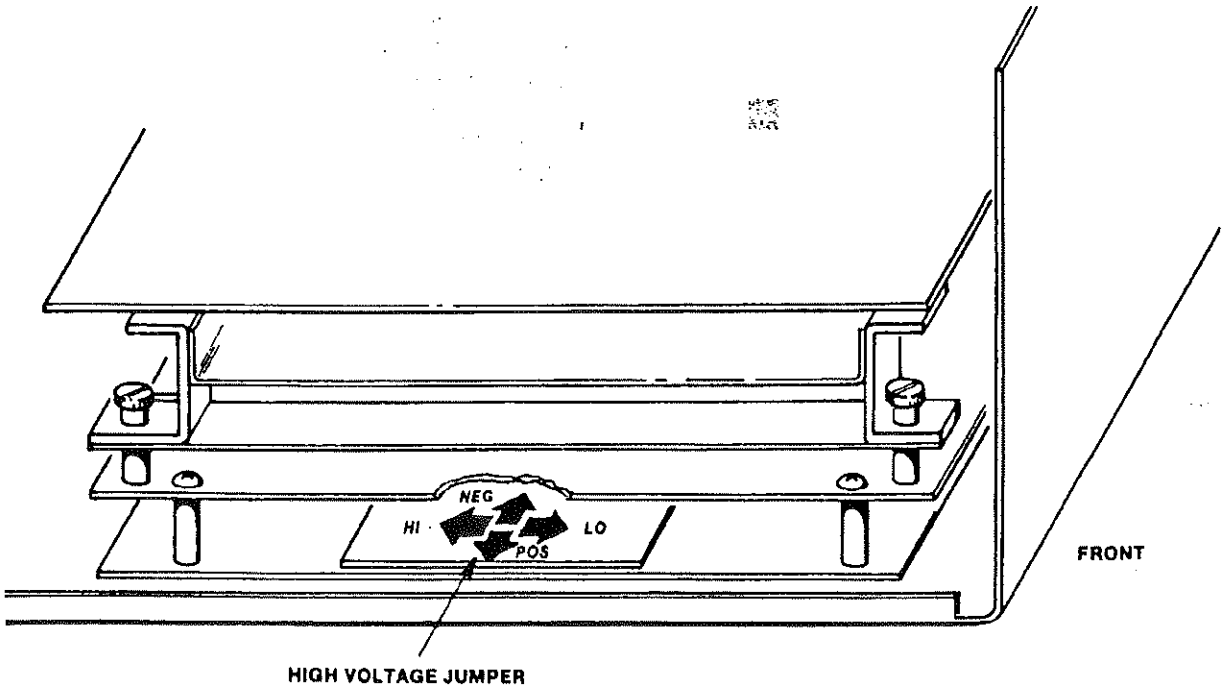

Fig. 3.1. Location of High-Voltage Polarity Jumper.

WARNING: HIGH VOLTAGES ARE PRESENT INSIDE THE 92X UNIT WHEN AC POWER IS APPLIED. THE 92X SHOULD BE TURNED OFF AND UNPLUGGED ANY TIME THE COVER IS REMOVED.

1. Turn OFF the power to the 92X and disconnect the power cord from the outlet. WAIT for at least 1 minute so that all of the high-voltage capacitors can discharge before continuing.
2. Remove the four screws that hold the top cover of the 92X in place and remove the top cover.
3. Rotate the unit so that the front panel is facing you.
4. Locate the amplifier polarity switch. It is a small slide switch located in the far left corner on the top board in the 92X. See Fig. 3.2.
5. For positive input signals, slide the switch to the left. For negative input signals, slide the switch to the right.
6. Replace the cover and the four screws that hold it in place.

3.1.7. Cabling up a System

The standard cabling of a 92X system is shown in Fig. 3.3. If you have a detector that uses a TRP (that is, a "-PLUS" model), all connections shown should be made. If a resistive-feedback preamplifier (that is, a detector without a "-PLUS" model number) is used, the 132 INHIBIT GENERATOR does not exist and the connection to TRP INH is not made.

Unlike most high-voltage power supplies, the high-voltage supply in the 92X will not power up unless the BIAS SHUTDOWN cable is connected to the REMOTE SHUTDOWN, and the detector is cold. This connection prevents accidental damage to an expensive germanium detector. It is, therefore, highly recommended that the BIAS SHUTDOWN always be used. If, however, you would like to run the system without the BIAS SHUTDOWN or you are using a detector with an incompatible High-Voltage Shutdown, this feature may be defeated by placing a 50-, 100-, or 0-Ω terminator on the REMOTE SHUTDOWN input on the rear panel of the 92X.

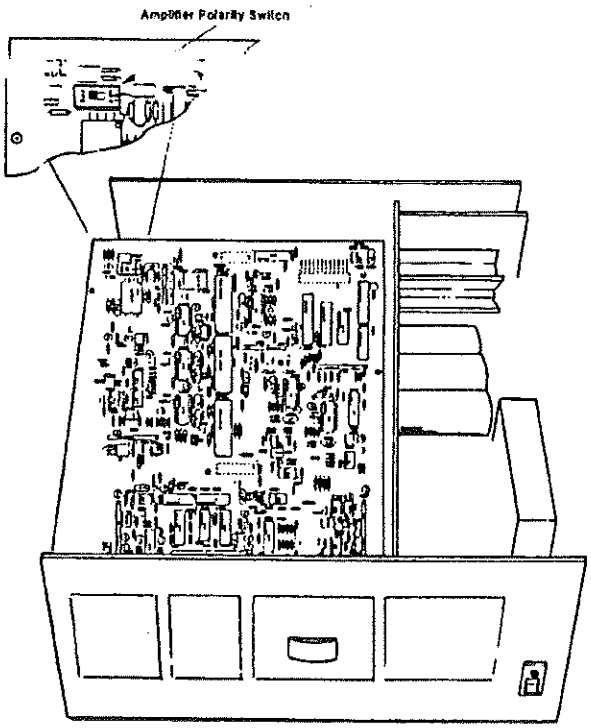

Fig. 3.2. Location of Amplifier Polarity Switch.

3.2. ADVANCED FEATURES SETUP

3.2.1. Setting Up a Multiple MCB System

When a spectroscopy system has more than one MCB, each MCB that is connected to the system via the Dual-Port Memory (DPM) interface must have a unique DPM address. In a single MCB system, the MCB is always at address 1 and no special setup is required.

The first step in the process is to assign a unique MCB number to each MCB in the system. It is often useful to place a sticker on the front of each MCB with the MCB number on it to eliminate confusion. If there is no 919 in the system, number each MCB sequentially. For example, if you have one ACE or SPECTRUM ACE (916 or 916a), two 92Xs and one 918A in the MCB system, you might label one 92X as MCB #1, the ACE or SPECTRUM ACE (916 or 916A) as MCB #2, the 918A as MCB #3, and the second 92X as MCB #4. See Example 1 in the chart on page 10.

If there is a 919 in the system, each input of the 919 that is used is assigned a MCB address. For example, if a system consists of one 919 and one 92X and only three inputs of the 919 are used, the 919 would be MCBs #1, #2 and #3, and the 92X would be MCB #4. (See Example 2 in the chart on page 10). You should fill out the chart on page 10 with your configuration.

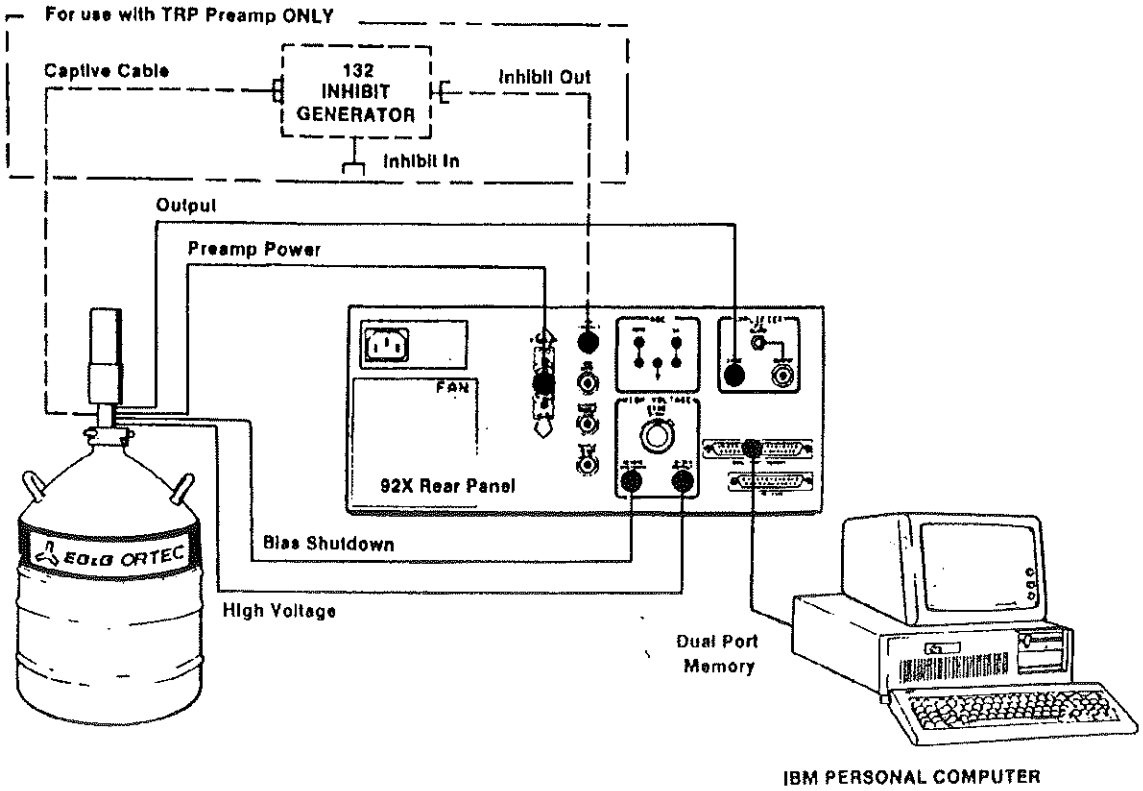

Fig. 3.3. Standard System Interconnections.

MCB#	MCB Type	Example 1	Example 2
1		92X #1	919
2		916	919
3		918A	919
4		92X #2	92X
5			
6			
7			
8			

IMPORTANT: If the 92X is being added to a 918A, 918, or 917 system that was delivered before December 1988, the ADCAM/IBM INTERFACE card and the Dual-Port Memory board in the MCB may need modification for proper operation with the 92X. If this is the situation, MAESTRO will be unable to communicate with the 92X. See Appendix F for more information.

Dual-Port Memory Address Jumper

Once each MCB in the system has a MCB number assigned, the hardware must be set to the address corresponding to the MCB number. To set the MCB address in a 92X do the following:

WARNING: HIGH VOLTAGES ARE PRESENT INSIDE THE 92X UNIT WHEN AC POWER IS APPLIED. THE 92X SHOULD BE TURNED OFF AND UNPLUGGED ANY TIME THE COVER IS REMOVED.

1. Turn OFF the power to the 92X and disconnect the power cord from the outlet. WAIT for at least 1 minute so that all of the high-voltage capacitors can discharge before continuing.
2. Remove the four screws which hold the top cover of the 92X in place and remove the top cover.
3. Rotate the unit so that the front panel is to your right.
4. Loosen the large thumbscrews, one visible on the left and one on the right of the unit.
5. Lift the shield under the second printed wiring board. The shield will swing up about 2 inches before stopping. Hold it at this point. See Fig. 3.4.
6. Locate the DPM address selection pins. They are located on the underside of the shield that was raised in step 5. See Fig. 3.4.
7. Move the DPM address jumper to the set of pins which corresponds to the MCB number of the 92X. See Fig. 3.4 for the MCB number assigned to each set of pins.
8. Lower the top assembly and retighten the thumbscrews.
9. Replace the cover and the four screws that hold it in place.

ADCAM/IBM Interface Select Switches

After the address of each MCB is selected within the MCB as outlined above, the ADCAM/IBM Interface card must be configured to communicate with the MCB. The ADCAM/IBM Interface card, whether the standard version or the PS/2 version, has an 8-position DIP switch on it. Each switch in this package of eight switches represents one of eight possible MCBs that may be physically connected to a single interface card. The MCB select switch that corresponds to the MCB number of each MCB that is connected to the interface card must be in the ON or CLOSED position. All other MCB select switches must be in the OFF or OPEN position. For example, if MCB numbers 1 and 4 are physically connected to the interface card, MCB select switches 1 and 4 should be in the ON position while all other switches should be in the OFF position.

If multiple MCBs are connected to a single interface card, a DUAL-PORT FANOUT module must be used to turn the single connector on the interface card into enough connectors to wire up the system. The DUAL-PORT FANOUT input should be connected to the interface card, and each DUAL-PORT FANOUT output should be connected to a MCB.

3.2.2. Setting Up Serial Communication

The serial port on the rear panel of the 92X can be used to control the 92X from great distances because you are not limited by the 10-ft dual-port memory cable. However, you will no longer have the ability to view live data on the computer screen because the dual-port memory allows this feature. The serial port has the following characteristics:

Baud Rate:	9600
Parity:	EVEN
Parity Checking:	NONE
Stop Bits:	2
Data Bits:	8

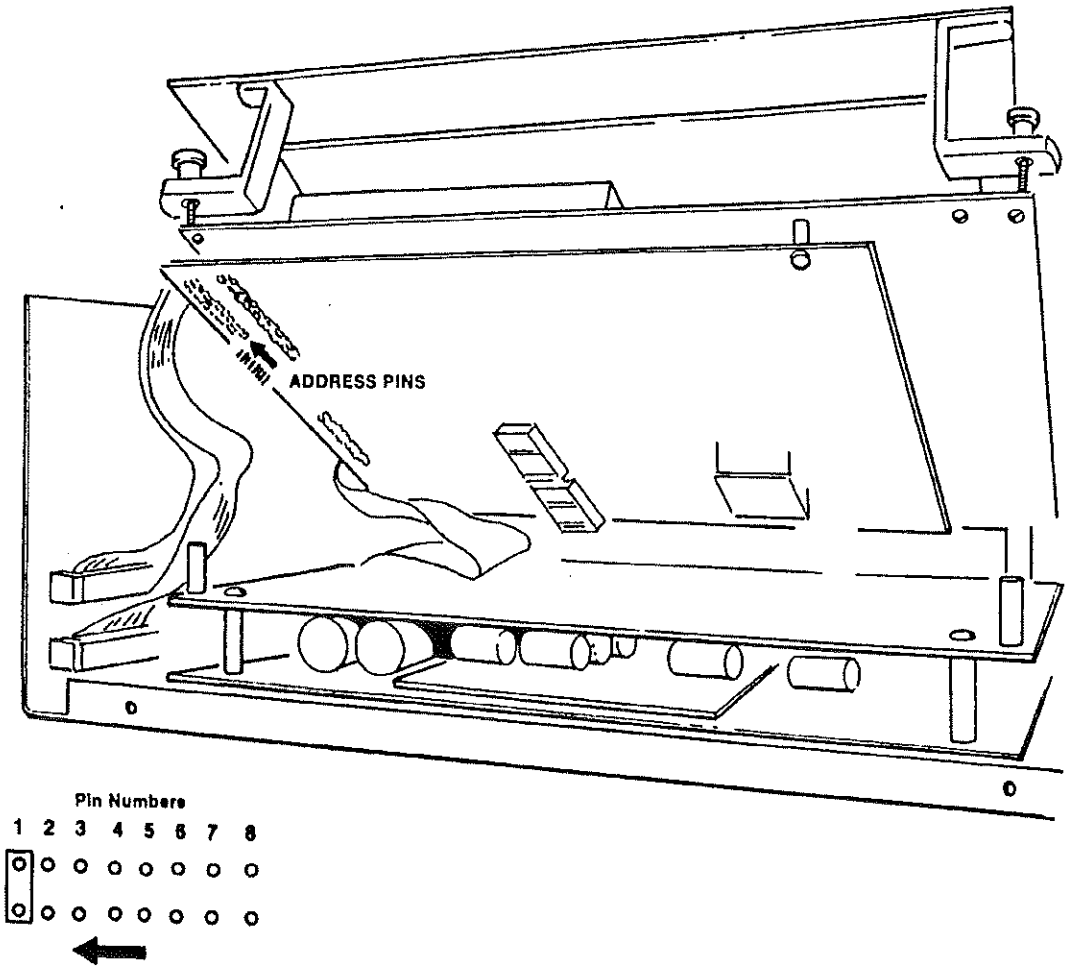

Fig. 3.4. Exposing the Dual-Port Memory Address Pins.

The port adheres to the RS-232-C standard. If these settings are unacceptable for the application, they can be changed via the DIP SWITCHES (see Section 3.2.3.). If the 92X is connected to a computer or terminal, a null-modem cable must be used to connect the computer to the 92X. The commands and responses listed in Appendix B are used to communicate with the 92X via the serial port.

3.2.3. DIP SWITCH Settings

The DIP SWITCHES in the 92X will normally not have to be changed. The default settings will serve most users.

There are two DIP SWITCH packs located on the controller board of the 92X. The first has 8 positions, and the second has 4 positions. The 8-position switch has the following definitions:

Switches 1-4: Serial Port Baud Rate
The legal settings are as follows:

Switch 1	Switch 2	Switch 3	Switch 4	BAUD RATE
ON	ON	ON	ON	50
OFF	ON	ON	ON	75
ON	OFF	ON	ON	110
OFF	OFF	ON	ON	134.5
ON	ON	OFF	ON	150
OFF	ON	OFF	ON	200
ON	OFF	OFF	ON	300
OFF	OFF	OFF	ON	600
ON	ON	ON	OFF	1200
OFF	ON	ON	OFF	1800
ON	OFF	ON	OFF	2400
OFF	OFF	ON	OFF	4800
ON	ON	OFF	OFF	9600
OFF	ON	OFF	OFF	19200
ON	OFF	OFF	OFF	38400
OFF	OFF	OFF	OFF	38400

Switch 5: Data Bits OFF = 8 Data Bits
ON = 7 Data Bits

Number of data bits per asynchronously transmitted character. Factory set at OFF, 8 data bits. When set to ON, only 7 data bits are to be used. Note that binary data (RADIX_BINARY) operations are not allowed in the command language if 7-bit bytes are in use.

Switch 6: Parity Enable OFF = Parity Checked
ON = Parity Ignored

Factory set to ON to ignore parity.

Switch 7: Parity Polarity OFF = Even Parity
ON = Odd Parity

Factory set to OFF or even parity. This switch indicates the type of parity generated and the type of parity checked for, if switch 6 is enabled.

Switch 8: Stop Bits OFF = 2 stop bits
ON = 1 stop bit

Factory set to ON for 1 stop bit. The choice of 1 vs 2 stop bits should not affect the ability of a receiver to detect the end of a byte.

The 4-position switch has the following definitions:

Switch 1: Enable/Disable RS-232
OFF = Enable port
ON = Disable port

Factory set to OFF to enable RS-232 port.

Switch 2: Enable/Disable Mailbox
OFF = Enable Mailbox
ON = Disable Mailbox

Factory set to OFF to allow mailbox communication.

Switch 3: Unused

Switch 4: 92X/919 Switch
OFF = 92X
ON = 919

Factory set to OFF. This switch should always be OFF.

The DIP SWITCHES are <u>not</u> easy to access, so it is advisable to use the default settings if at all possible. If the DIP SWITCHES must be changed, follow these steps to gain access to the switches:

<u>WARNING: HIGH VOLTAGES ARE PRESENT INSIDE THE 92X UNIT WHEN AC POWER IS APPLIED. THE 92X SHOULD BE TURNED OFF AND UNPLUGGED ANY TIME THE COVER IS REMOVED.</u>

1. Turn OFF the power to the 92X and disconnect the power cord from the outlet. WAIT for at least 1 minute so that all of the high-voltage capacitors can discharge before continuing.
2. Remove the four screws which hold the top cover of the 92X in place and remove the top cover.
3. Rotate the unit so that the front panel is to your right.
4. Loosen the large thumbscrews, one visible on the left and one on the right of the unit.
5. Lift the top board in the stack of boards. It will swing up and out of the way, exposing the ADC board below.
6. Locate the Dual-Port memory cable which plugs onto the back of the digital board. The cable is the large ribbon cable in the front left-hand corner of the exposed assembly.
7. Gently pull up the Dual-Port Memory cable to disconnect it from the board below. Fold the cable toward the rear of the unit to expose the serial cable below it. The serial cable is a smaller ribbon cable which is underneath the DPM cable.

8. Gently pull up the Serial cable to disconnect it from the board below. Fold the cable toward the rear of the unit.

9. Now, lift up on the board that the cables were plugged to. The assembly will swing up, much like the first assembly swung up. Be careful that the cable harness does not catch on the components on the rear panel.

10. The DIP SWITCHES are now exposed on the right side of the back of the assembly that just swung up. Set the switches as desired.

11. Once the switches have been set, swing the first assembly back down and plug the serial and DPM cables back to it. Take care to align the cables properly because they are easy to offset. The cable should nearly touch the metal shield at the edge closest to you when the cable is properly aligned. Look below the shield to ensure that the cables are correctly seated on the pins before pushing them all the way down.

12. Fold down the top board assembly and retighten the thumbscrews.

13. Replace the cover and the four screws which hold it in place.

4. TROUBLESHOOTING GUIDE

This section of the manual contains some troubleshooting hints to help when something goes wrong. Below are listed several common problems and possible solutions:

Nothing happens when the power is turned on:

1. Check to see that the ac line cord is firmly plugged into the receptacle on the rear of the 92X.
2. Check the fuse in the ac input block on the rear panel.

High Voltage will not turn on:

1. Make sure detector has not warmed up.
2. Ensure that BIAS SHUTDOWN on the detector is connected to the REMOTE SHUTDOWN on the rear panel. The bias supply will not come on if no input is connected to REMOTE SHUTDOWN. See Section 3.1.7, **Cabling a 92X System**, for more information.

When ADC is started, dead time is 100% and no data is taken:

1. Make sure the amplifier has been pole-zeroed since power was last turned off.
2. Raise the LLD voltage.

DUAL-PORT Memory does not exist:

1. Carefully review the instructions in the section labeled SETTING UP A MULTIPLE MCB SYSTEM.
   A. Ensure that the MCB address has been properly set.
   B. Ensure that the DIP SWITCH on the interface card corresponding to the MCB connected to the interface card is turned on.
   C. Check that Dual-Port cable inside the unit was properly reinstalled if the MCB address has been changed.

Data or settings lost when power is turned off:

1. Battery is low. The battery is attached to the 92X chassis with a Velcro® fastener, so that it can be easily removed and replaced. The battery is located on the second shield down near the front of the instrument. To replace the battery do the following:

WARNING: HIGH VOLTAGES ARE PRESENT INSIDE THE 92X UNIT WHEN AC POWER IS APPLIED. THE 92X SHOULD BE TURNED OFF AND UNPLUGGED ANY TIME THE COVER IS REMOVED.

1. Turn OFF the power to the 92X and disconnect the power cord from the outlet. WAIT for at least 1 minute so that all of the high-voltage capacitors can discharge before continuing.

2. Remove the four screws that hold the top cover of the 92X in place and remove the top cover.

3. Rotate the unit so that the front panel is to your right.

4. Loosen the large thumbscrews, one visible on the left and one on the right of the unit.
5. Lift the top board in the stack of boards. It will swing up and out of the way, exposing the ADC board below.
6. Locate the battery. It is attached to the shield near the front of the 92X.
7. Firmly pull up on the battery to remove it from the Velcro fastener. Position the new battery with the same orientation as the old battery and press it onto the Velcro fastener.
8. Follow the red and black wires connected to the old battery to the connector on the digital board. Route the new battery cable in a similar fashion and connect it to the connector the old battery was connected to.
9. Swing down the amplifier board and tighten the thumbscrews to hold it in place.
10. Replace the cover and the four screws that hold it in place.

APPENDIX A: 92X SHARED MEMORY INTERFACE

The MCB shared memory interface occupies one entire page of PC-BUS address space, usually from D000:0000 to D000:FFFF hex, plus one PC I/O port, usually port number 292 hex. The following sections describe how to communicate with a Model 92X (or compatible) MCB through the shared memory interface.

Page Select Port

The page select I/O port selects one of up to 16 different pages of MCB memory which can be mapped to the shared memory page of the PC. The first eight pages of MCB memory are data memory pages that correspond to MCBs 1 through 8, respectively. The last eight pages are mailbox pages that correspond to the same MCBs (1 through 8) as the eight data memory pages. For example, when a binary 0 is output to the page select port, MCB 1 (the first MCB) data memory is mapped to the shared memory page. When binary 8 is output to the page select port, MCB 1 mailbox is mapped to the shared memory page.

Data Memory Organization

The 92X data memory pages contain 16384 four-byte channels of data as described below:

D000:0000		Least significant byte of MCB channel 0
D000:0001		Next to least significant byte of MCB channel 0
D000:0002		Next to most significant byte of MCB channel 0
D000:0003	bits 0-6	Most significant byte of MCB channel 0
	bit 7	MCB ROI bit for channel 0
D000:0004		Least significant byte of MCB channel 1
D000:0005		Next to least significant byte of MCB channel 1
D000:0006		Next to most significant byte of MCB channel 1
D000:0007	bits 0-6	Most significant byte of MCB channel 1
	bit 7	MCB ROI bit for channel 1
	.	.
	.	.
D000:FFFC		Least significant byte of MCB channel 16383
D000:FFFD		Next to least significant byte of MCB channel 16383
D000:FFFE		Next to most significant byte of MCB channel 16383
D000:FFFF	bits 0-6	Most significant byte of MCB channel 16383
	bit 7	MCB ROI bit for channel 16383

Mailbox Organization

The 92X mailbox pages are used to provide a full-duplex, record-oriented communication channel between the MCBs and the PC. The following chart describes the mailbox organization. Note that mailbox bytes appear every second byte in a mailbox page and are referred to with decimal offsets (e.g., 0,1,2,...,8,9,10,11,...).

byte 0 (D000:0000)	MCB$OUTFLG	Set to FF hex by the PC to indicate that a message from the PC to the MCB is ready. Set to 0 by the MCB when the message is accepted.
byte 1 (D000:0002)	MCB$TEST	Ignored by all MCBs. May be read and written by PC. Used by the PC to determine if MCB shared memory exists.
bytes 2 through 13 decimal		RESERVED
byte 14 (D000:001C	MCB$OUTLEN	Least significant byte of the 16-bit integer that is the length of the message in MCB$OUTBUF.
byte 15 (D000:001E)		Most significant byte of the 16-bit integer that is the length of the message in MCB$OUTBUF.
byte 16 (D000:0020)	MCB$OUTBUF	First of 480 bytes that hold messages sent from the PC to the MCB. The number of bytes in the message is stored in MCB$OUTLEN.
byte 496 (D000:03E0)	MCB$INFLG	Set to FF hex by the MCB to indicate that a message from the MCB to the PC is ready. Set to 0 by the PC when the message is accepted.

bytes 497 through 509 decimal		RESERVED
byte 510 (D000:03FC)	MCB$INLEN	Least significant byte of the 16-bit integer that is the length of the message in MCB$INBUF.
byte 511 (D000:03FE)		Most significant byte of the 16-bit integer that is the length of the message in MCB$INBUF.
byte 512 (D000:0400)	MCB$INBUF	First of 512 bytes that hold messages sent from the MCB to the PC. The number of bytes in the message is stored in MCB$INLEN.
bytes 1024 through 8191		RESERVED

Mailbox Protocol

Before communicating with an MCB, you must first map its mailbox page to the PC-BUS. This is done by writing the proper value to the shared memory page select port as follows:

MCB 1	output decimal 8 (binary 1000) to page select port.
MCB 2	output decimal 9 (binary 1001) to page select port.
MCB 3	output decimal 10 (binary 1010) to page select port.
...	...
MCB 8	output decimal 15 (binary 1111) to page select port.

Once the MCB's mailbox page is mapped, you should determine if the MCB exists. This can be done by writing an arbitrary value to the MCB test location (MCB$TEST) then reading the value back two or more times, changing the value, and reading the new value back two or more times. The MCB exists if the value read is always the same as the value written.

To send a message to the MCB, you must first ensure that any previous messages have been accepted by the MCB before you overwrite the previous message. Wait until the MCB writes a value other than hex FF into MCB$OUTFLG; then put the new message into MCB$OUTBUF and the message length into MCB$OUTLEN. After the message and its length are written to their respective buffers, write FF hex into MCB$OUTFLG to signal that a message is present for the MCB.

To receive a message from the MCB, you must wait for the MCB to write FF hex into MCB$INFLG. Note that the MCB will wait until MCB$INFLG contains a zero before it writes FF hex there. A message from the MCB may be read when the MCB writes FF hex to MCB$INFLG. The length of the message will be in MCB$INLEN, and the text of the message will be in MCB$INBUF. After the message is received, set MCB$INFLG to zero to allow new messages to be placed in MCB$INBUF by the MCB.

A communication deadlock can occur if values other than zero or FF hex are written in MCB$OUTFLG or MCB$INFLG. The MCB will accept a command only when FF hex is in MCB$OUTFLG. If communication software waits for zero in MCB$OUTFLG yet MCB$OUTFLG contains neither zero nor FF hex, a deadlock has occurred. If MCB$OUTFLG contains neither zero nor FF hex, zero should be written as the message length in MCB$OUTLEN; then zero should be written in MCB$OUTFLG to break the deadlock. Similarly, if MCB$INFLG contains neither zero nor FF hex, zero should be written in MCB$INLEN; then zero should be written in MCB$INFLG.

For information about the types of messages that are sent and received by an MCB, refer to Appendix B.

APPENDIX B: COMMANDS AND RESPONSES

Communication with a Model 92X Multichannel Buffer consists of sending command records to the MCB and receiving response records from the MCB. Model 92X records, both command and response, consist of a sequence of printable ASCII characters followed by an ASCII carriage return. The single exception to this rule is the "#B" response record for the WRITE command, which contains binary integer numbers. All commands eventually respond with a percent response record (so named because it begins with an ASCII percent sign "%") which signifies the completion of the command. SHOW and STEP commands respond with a dollar response record (begins with an ASCII dollar sign "$") followed by a percent response record. The WRITE command can respond with multiple pound sign records (begins with an ASCII pound sign "#") but eventually completes by sending a percent response record. All other commands result in a single percent response record upon completion.

Command records can be sent to a Model 92X MCB through the shared memory mailbox (see Appendix A, Shared Memory Interface) or through the serial interface. With mailbox communication all characters in the mailbox output buffer, MCB$OUTBUF, up to the first carriage return or the end of the message (defined by MCB$OUTLEN) are considered to be part of a command to the MCB. With serial line communication all characters sent to the MCB up to the first carriage return are considered to be part of a command to the MCB.

Response records are returned by the MCB through the same interface that received the command. Serial line commands result in serial line responses, and mailbox commands result in mailbox responses.

Command Records

Model 92X commands consist of a command header, which may be followed by numeric parameter values. The header consists of a verb or a verb and noun separated by an underscore or a verb, noun, and modifier, each separated by underscores. The verbs, nouns, and modifiers in the command header are mnemonic words such as the verb ENABLE or the noun OVERFLOW that relate to the function performed by the MCB when it executes the command. The first four letters of any word will always be enough to uniquely identify the word when composing commands for an MCB. For example, the command ENABLE_OVERFLOW_PRESET can be abbreviated to ENAB_OVER_PRES.

Numeric parameters are unsigned integer numbers that follow the command header separated by one or more spaces. Specific commands require up to three parameters, separated by commas, which specify numeric quantities related to the operation of the MCB, such as live time or conversion gain. The command SET_WINDOW 0,16384 has two parameters, 0 and 16384, which set the window of interest to start at channel 0 and continue for 16384 channels.

Some parameters listed in the command dictionary are considered optional and are distinguished from mandatory parameters by being surrounded by brackets in the command prototype line (e.g., SET_WINDOW [start,length]). Commands that have optional parameters may be sent to the MCB without the optional parameters, in which case the behavior will be changed as explained in the command description.

An optional checksum may be added to the end of any command sent to an MCB. The checksum is a 1-byte unsigned integer sum of all of the characters in a command, treated as unsigned integers, up to and including the comma or space(s) that separates the checksum from the command. The checksum simply appears as an extra parameter added to the end of the command parameter list. For commands that do not normally have parameters, the checksum appears as the only parameter separated from the header by one or more spaces. All optional parameters must be included in a command if a checksum is to be provided so that the checksum is not mistaken by the MCB as a parameter. For example, the SET_WINDOW command must include the two optional parameters, start and length, if the checksum is provided (e.g., SET_WINDOW 0,16384,209).

Percent Response Records

Model 92X MCBs respond to all commands with a percent response record that signifies the completion of the command. Percent response records contain two error code numbers and a 1-byte checksum as follows:

%aaabbbccc<CR>

where % represents the ASCII % character, aaa represents the macro error code, bbb represents the micro error code, ccc represents the checksum and <CR> represents the ASCII carriage return character signifying the end of the record. The macro error code represents the general class of error with 0 meaning no error, and the micro error code represents the sub-class of error with 0 meaning no error. The following table lists all percent responses for a Model 919/92X MCB:

Unconditional Success:

%000000069<CR>	No errors detected. Command executed as specified.

START and STOP Warnings:

%000005074<CR>	Device already started or stopped. The START or STOP command was ignored.
%000006075<CR>	Device preset already exceeded. The START command was ignored.
%000016076<CR>	START requested but 92X amplifier not Pole-Zeroed since last power-up. START was attempted anyway.
%000032074<CR>	START requested but 92X High Voltage not enabled START was attempted anyway.

Note that the above responses can be combined to indicate a combination of warnings such as:

%000048081<CR>	92X amplifier was not Pole-Zeroed nor was 92X High Voltage enabled. The START was attempted anyway.
%000037079<CR>	Device already started and 92X High Voltage not enabled. The command was ignored.
%000053077<CR>	Device already started, 92X High Voltage not enabled and 92X amplifier was not Pole-Zeroed. The command was ignored.
%000038080<CR>	Device preset already exceeded and 92X High Voltage not enabled. The command was ignored.
%000054078<CR>	Device preset already exceeded, 92X High Voltage not enabled and 92X amplifier was not Pole-Zeroed. The command was ignored.

Power-Up Alert: Power-up just occurred and the selftest results are:

%001000070<CR>	All power-up selftest passed
%003000072<CR>	Battery backed-up data lost
%005002076<CR>	ROM1 failed selftest
%005004078<CR>	ROM2 failed selftest
%005006080<CR>	ROM1 and ROM2 failed selftest
%005008082<CR>	Processor memory failed selftest
%005010075<CR>	ROM1 and processor memory failed selftest
%005012077<CR>	ROM2 and processor memory failed selftest
%005014079<CR>	ROM1, ROM2 and processor memory failed selftest
%007002078<CR>	Battery backed-up data lost and ROM1 failed selftest
%007004080<CR>	Battery backed-up data lost and ROM2 failed selftest
%007006082<CR>	Battery backed-up data lost, ROM1 and ROM2 failed selftest
%007008084<CR>	Battery backed-up data lost and processor memory failed selftest
%007010077<CR>	Battery backed-up data lost, ROM1 and processor memory failed selftest
%007012079<CR>	Battery backed-up data lost, ROM2 and processor memory failed selftest
%007014081<CR>	Battery backed-up data lost, ROM1, ROM2 and processor memory failed selftest

TEST command Results:

%004002075<CR>	ROM1 failed test
%004004077<CR>	ROM2 failed test
%004008081<CR>	Processor Memory failed test
%004016080<CR>	Spectral Data Memory or Mailbox Memory failed test
%004032078<CR>	RESERVED
%004064083<CR>	Serial Line failed test

Note that the above responses can be combined to indicate a combination of errors such as:

%004006079<CR>	ROM1 and ROM2 both failed test
%004010074<CR>	Processor Memory and ROM1 both failed test

Command Syntax Errors:

%129001082<CR>	Invalid command verb
%129002083<CR>	Invalid command noun
%129003084<CR>	Invalid command verb and noun
%129004085<CR>	Invalid command modifier
%129005086<CR>	Invalid command verb and modifier
%129006087<CR>	Invalid command noun and modifier
%129007088<CR>	Invalid command verb, noun and modifier
%129132087<CR>	Invalid command (verb, noun and modifier valid but not together)

Communication Errors:

%130001074<CR>	Serial line buffer overrun
%130002075<CR>	Serial line parity error
%130003076<CR>	Serial line buffer overrun and parity error
%130004077<CR>	Serial line framing error
%130005078<CR>	Serial line buffer overrun and framing error
%130006079<CR>	Serial line parity error and framing error
%130007080<CR>	Serial line buffer overrun, parity error and framing error
%130008081<CR>	Serial line break detected
%130128084<CR>	Command checksum incorrect (only when optional checksum provided)
%130129085<CR>	Command (or WRITE handshake) record too long
%130131078<CR>	WRITE command aborted by "HA" handshake
%130132079<CR>	WRITE command aborted by timeout
%130133080<CR>	WRITE command aborted by invalid handshake

Execution Errors:

%131128085<CR>	Invalid 1st command parameter
%131129086<CR>	Invalid 2nd command parameter
%131130078<CR>	Invalid 3rd command parameter
%131132080<CR>	Invalid number of command parameters
%131134082<CR>	Invalid device or segment selected
%131135083<CR>	Command not allowed while acquisition in progress
%131136084<CR>	Command not allowed in current mode of operation
%131137085<CR>	Hardware failure detected while processing command

Dollar Response Records

SHOW and STEP commands respond with a single dollar response record followed immediately by a percent response record. All valid dollar response records for each command are listed in the command dictionary.

The following table lists the general form of each dollar response record for a Model 919/92X MCB. In this table lower case letters represent numeric values. The letters "ccc" always represent an 8-bit unsigned checksum of all characters on the record up to but not including the checksum characters, and <CR> represents the ASCII carriage return character.

$Axxxccc<CR>	xxx is a single 8-bit unsigned number
$Cxxxxxccc<CR>	xxxxx is a single 16-bit unsigned number
$Dxxxxxyyyyyccc<CR>	xxxxx and yyyyy are 16-bit unsigned numbers
$Exxxxxccc<CR>	xxxxx is a single 16-bit alarm mask
$Fssss...<CR>	ssss... is a variable length ASCII character sequence (no checksum is sent with this record)
$Gxxxxxxxxxxccc<CR>	xxxxxxxxxx is a single 32-bit unsigned number
$IT<CR>	True response to a SHOW command (no checksum)
$IF<CR>	False response to a SHOW command (no checksum)

$Jxxxxxyyyyy...ccc<CR>	Response to SHOW_CONFIGURATION command
$Mxxxxxxxxxx...ccc<CR>	Response to SHOW_STATUS command
$Nxxxyyyzzzccc<CR>	xxx, yyy and zzz are 8-bit unsigned numbers

Command Catalog

This section lists each Model 92X command with a description of its operation. The descriptions include a list of any unusual responses that may result. As described in previous sections, the usual response from a command is a %000000069<CR> response, which represents a macro error code of 0 and a micro error code of 0 (no errors).

All execution error responses, if any, are listed for each command. Though syntax and communication error responses may result from any command, in practice, these error responses rarely occur on systems with reliable communication hardware running debugged software. Refer to the section on Percent Response Records in this Appendix for information about error responses.

In the following catalog the commands are listed in alphabetical order, each starting with a command prototype line. Upper-case letters, numeric digits, blank space and special symbols such as the underscore "_" and comma "," in the prototype line are literal text to be sent to the MCB exactly as it appears. Lower-case letters in the prototype line represent numeric values as described in the accompanying text and should not be sent literally to the MCB but should be replaced by an appropriate numeric value. Items in the command prototype that are surrounded by brackets "[...]" are optional items and are not always required.

In this section the term <CR> represents the ASCII carriage return character, decimal value 13, and the character "_" represents the ASCII underscore character, decimal value 95.

CLEAR

The channels of spectral data in the window-of-interest (see SET_WINDOW command) for the currently selected device (see SET_DEVICE command) are set to zero. The live time and truetime counters for the currently selected device are also set to zero. This command is equivalent to the combination of CLEAR_COUNTERS and CLEAR_DATA commands.

CLEAR_ALL

This command is equivalent to the combination of CLEAR_COUNTERS, CLEAR_DATA, CLEAR_PRESETS and CLEAR_ROI commands.

Execution Errors:

%131135083<CR>	The command was attempted while spectrum acquisition was in progress. No action was taken.

CLEAR_COUNTERS

The live-time and truetime counters for the currently selected device (see SET_DEVICE command) are set to zero.

CLEAR_DATA

The channels of spectral data in the window-of-interest (see SET_WINDOW command) for the currently selected device (see SET_DEVICE command) are set to zero. The ROI flags are not changed, nor are the presets changed.

CLEAR_PRESETS

The live-time, truetime, ROI integral, ROI peak, and overflow presets are all set to zero (disabled) for the currently selected device (see SET_DEVICE command).

Execution Errors:

%131135083<CR>	The command was attempted while spectrum acquisition was in progress. No action was taken.

CLEAR_ROI

The region-of-interest flags for the channels in the window-of-interest (see SET_WINDOW command) in the currently selected device (see SET_DEVICE command) are cleared.

Execution Errors:

%131135083<CR> The command was attempted while spectrum acquisition was in progress. No action was taken.

COMPUTER

Prepares the serial line for communication with a computer. In computer mode, text sent to the 919/92X does not echo back to the host, and response records sent to the host by the 919/92X are terminated only with a carriage return (no accompanying line feed). This command has no effect when sent via the mailbox. See also TERMINAL.

DISABLE_ALARM

Ends the transmission of alarm responses when a device stops counting. Alarm responses are disabled for the serial line and the mailbox communication paths independently. See also ENABLE_ALARM and SHOW_ALARM.

DISABLE_GAIN_STABILIZATION

Stops stabilization of the gain peak while data is being acquired. The gain stabilization adjustment is held at its current value until either gain stabilization is reenabled with the ENABLE_GAIN_STABILIZATION command or reinitialized with the INITIALIZE_GAIN_STABILIZATION, SET_GAIN_PEAK or SET_GAIN_WIDTH command. Spectrum stabilization is available only on device 1. See the section on digital spectrum stabilization for more information. See also SHOW_GAIN_STABILIZATION.

DISABLE_HV

Turns off the high voltage output on the rear panel of a Model 92X. Note that with no external load on the high voltage output it takes approximately 60 seconds for the high voltage to drop to zero volts. See the section on the bias supply for more information about the high voltage output. See also ENABLE_HV and SHOW_HV. This command is available only on Model 92X MCBs.

DISABLE_OVERFLOW_PRESET

Disables the overflow preset for the currently selected device (see SET_DEVICE command). Channels that receive a count when they contain 2147483647 counts, the maximum number of counts, will roll over to zero counts if the overflow preset is disabled. See also ENABLE_OVERFLOW_PRESET and SHOW_OVERFLOW_PRESET.

DISABLE_PZADJUST_AUTO

Prepares the Model 92X amplifier for connection to a transistor-reset preamplifier. Automatic pole-zero is not allowed when a transistor-reset preamplifier is connected to the 92X amplifier. See Section 2.1 on the 92X internal amplifier for more information the 92X internal amplifier. See also ENABLE_PZADJUST_AUTO and SHOW_PZADJUST_AUTO. This command is available only on Model 92X MCBs.

Execution Errors:

%131135083<CR> The command was attempted while spectrum acquisition was in progress. No action was taken.

DISABLE_REMOTE

Disables the recognition of commands on the alternate communication paths. If this command is sent to the Model 919/92X via the mailbox communication path, it disables command recognition on the serial path. If this command is sent via the serial path, it disables command recognition on the mailbox communication path. See also ENABLE_REMOTE and SHOW_REMOTE.

DISABLE_ZERO_STABILIZATION

Stops stabilization of the zero peak while data is being acquired. The zero stabilization adjustment is held at its current value until either zero stabilization is reenabled with the ENABLE_ZERO_STABILIZATION command or reinitialized with the INITIALIZE_ZERO_STABILIZATION, SET_ZERO_CHANNEL or SET_ZERO_WIDTH commands. Spectrum stabilization is available only on device 1. See the section on digital spectrum stabilization for more information. See also SHOW_ZERO_STABILIZATION.

ENABLE_ALARM

Begins the transmission of alarm responses, $E records, when an input stops counting. A $E response record will be transmitted only when no host commands are being processed (after a % response from a previous command and before another command is sent). Alarm responses are enabled for the serial line and the mailbox communication paths independently. If the command is sent to the MCB via the mailbox, then alarms will be sent to the mailbox. If the command is sent via the serial line, then alarms will be sent via the serial line. Alarms can be enabled for both communication paths at the same time. See also DISABLE_ALARM and SHOW_ALARM.

ENABLE_GAIN_STABILIZATION

Enables the stabilization of the gain peak by the previously selected method, either Gauss mode or point mode (see SET_MODE_GAUSS and SET_MODE_POINT). Spectrum stabilization is available only on device 1. See the section on digital spectrum stabilization for more information. See also DISABLE_GAIN_STABILIZATION, SHOW_GAIN_STABILIZATION, and INITIALIZE_GAIN_STABILIZATION.

ENABLE_HV

Turns on the high voltage output on the rear panel of a Model 92X. The voltage selected on the rear panel of the Model 92X will be present on the high voltage output within 60 seconds after this command is received unless the output is overloaded or the output is shut down by the high voltage shutdown. See Section 3.1.7 for more information about the high voltage shutdown. See the Section 2 on the bias supply for more information about the high voltage output. See also DISABLE_HV and SHOW_HV. This command is available only on Model 92X MCBs.

Execution Errors:

%131137085<CR> The high voltage could not be enabled due to a high voltage shutdown condition.

ENABLE_OVERFLOW_PRESET

Enables the overflow preset for the currently selected device (see SET_DEVICE command). Channels that receive a count when they contain 2147483647 counts, the maximum number of counts, will stop the acquisition for that channel's device if the overflow preset is enabled. The channel that caused the preset to complete will contain 214783647 counts. An alarm response record will be sent to the host if alarms are enabled for the device whose acquisition is stopped (see ENABLE_ALARM command). Overflow presets may be independently set for each of the devices in a Model 919. See also DISABLE_OVERFLOW_PRESET and SHOW_OVERFLOW_PRESET commands.

ENABLE_PZADJUST_AUTO

Prepares the Model 92X amplifier for connection to a resistive feedback preamplifier. Automatic Pole-Zeroing of the amplifier must be performed each time that power is applied to the Model 92X when connected to a resistive feedback preamplifier. The pole-zero is saved for power outages up to several days. See the Appendix D: Automatic Pole-Zero for more information. See also DISABLE_PZADJUST_AUTO and SHOW_PZADJUST_AUTO. This command is available only on Model 92X MCBs.

Execution Errors:

%131135083<CR> The command was attempted while spectrum acquisition was in progress. No action was taken.

ENABLE_REMOTE

Enables the recognition of commands on the alternate communication path. If this command is sent to the Model 919/92X via the mailbox it enables command recognition on the serial line. If this command is sent via the serial line it enables command recognition in the mailbox.

ENABLE_ZERO_STABILIZATION

Enables the stabilization of the zero peak by the previously selected method, either Gauss mode or point mode (see SET_MODE_GAUSS and SET_MODE_POINT). Spectrum stabilization is available only on device 1. See Appendix E for more information. See also DISABLE_ZERO_STABILIZATION, SHOW_ZERO_STABILIZATION, and INITIALIZE_ZERO_STABILIZATION.

INITIALIZE

Resets the Model 919/92X to initial conditions as though the following commands had been issued:

COMPUTER	SET_GATE_OFF
DISABLE_HV	SET_MODE_POINT
DISABLE_GAIN_STABILIZATION	SET_RADIX_BINARY
DISABLE_ZERO_STABILIZATION	SET_SEGMENT 1
SET_DEVICE 1	SET_WIDTH 512
SET_GAIN_ADJUST 2048	SET_WINDOW 0,16384
SET_GAIN_COARSE 10	SET_ZERO_ADJUST 2048
SET_GAIN_FINE 1638	SET_ZERO_PRESET 10
SET_GAIN_PRESET 10	TEST 1

The following commands are issued for both Mailbox and Serial communication paths:

DISABLE_ALARM ENABLE_REMOTE

The following commands are issued for each device in the MCB:

CLEAR_ALL SET_GAIN_CONVERSION 16384
STOP

In addition, the INITIALIZE command resets all internal hardware and internally marks the stabilizer gain channel, gain width, zero channel and zero width as undefined. After an INITIALIZE command the SET_GAIN_CHANNEL and SET_GAIN_WIDTH commands must be issued before gain stabilization can be enabled with the ENABLE_GAIN_STABILIZATION command. Likewise, the SET_ZERO_CHANNEL and SET_ZERO_WIDTH commands must be issued before zero stabilization can be enabled with the ENABLE_ZERO_STABILIZATION command.

Execution Errors:

The INITIALIZE command simulates a power-down/power-up cycle for the MCB after a simulated loss of battery backed-up memory. Thus the % response record is the response from the TEST 1 command as listed above.

%003000072<CR>	MCB Power-up occurred/Memory lost/No selftest errors (Normal Response for INITIALIZE command)
%007002078<CR>	All of above but selftest failed/ROM1 failed
%007004080<CR>	All of above but ROM2 failed
%007006082<CR>	All of the above but ROM1 and ROM2 both failed selftest

INITIALIZE_GAIN_STABILIZATION

Resets the gain peak stabilization adjustment to unity (no adjustment). This value is reported as 2048 by the SHOW_GAIN_ADJUSTMENT command. Spectrum stabilization is available only on device 1. See Appendix E for more information. See also SET_GAIN_ADJUSTMENT, ENABLE_GAIN_STABILIZATION, and DISABLE_GAIN_STABILIZATION.

INITIALIZE_ZERO_STABILIZATION

Resets the zero peak stabilization adjustment to unity (no adjustment). This value is reported as 2048 by the SHOW_ZERO_ADJUSTMENT command. Spectrum stabilization is available only on device 1. See Appendix E for more information. See also SET_ZERO_ADJUSTMENT, ENABLE_ZERO_STABILIZATION, and DISABLE_ZERO_STABILIZATION.

PAUSE_INPUT [input-num]

Waits for the next transition on the Sample Ready input or the beginning of the next command before responding with a % response record. If input-num is present, it must be 0. This parameter is provided for compatibility with other ORTEC modules.

Responses:

%000000069<CR>	Transition on Sample Ready input occurred
%130131041<CR>	Command was aborted by beginning of next command

PAUSE_INPUT_HIGH [input-num]

Waits for a high level to be detected on the Sample Ready input or for the beginning of the next command before responding with a % response record. The input level must remain high until the MCB responds; otherwise, it may not be detected. If input-num is provided, it must be zero. This parameter is provided for compatibility with other ORTEC modules.

Responses:

%000000069<CR> High level was detected on the input

%130131041<CR> Command was aborted by beginning of next command

PAUSE_INPUT_LOW [input-num]

Waits for a low level to be detected on the Sample Ready input or for the beginning of the next command before responding with a % response record. The input level must remain low until the MCB responds; otherwise, it may not be detected. If input-num is provided, it must be zero. This parameter is provided for compatibility with other ORTEC modules.

Responses:

%000000069<CR> Low level was detected on the input

%130131041<CR> Command was aborted by beginning of next command

RESET

Resets the 919/92x to the state just after power is applied. This command responds with a % response that indicates power-up just occurred. The Model 92X amplifier does not necessarily require automatic Pole-Zero adjustment after this command. Automatic pole-zero adjustment is required only after a true power-up.

RESET_REMOTE

Resets any UART error conditions when sent to the 919/92X via the mailbox. Resets mailbox communications when sent to the 919/92X via the serial communications path.

SET_DATA count

Sets all channels of spectral data in the window-of-interest (see SET_WINDOW command) for the currently selected device (see SET_DEVICE command) to the specified count. ROI flags are not affected.

SET_DATE day,month,year

Sets the date stored in the battery backed-up system clock to the specified values. Day may be any value from 1 to 31. Month may be any value from 1 through 12. Year may be any value from 0 through 99. The current date and time are stored for a device when an acquisition is started. See also SHOW_DATE, SET_TIME and SHOW_TIME.

SET_DATE_START day,month,year

Sets the start date for the currently selected device (see SET_DEVICE command) to the specified values. Normally the start date and time are set automatically whenever a device is started with the START command. See also SHOW_DATE_START, SET_TIME_START, and SHOW_TIME_START.

SET_DEVICE device

Makes the specified device the currently selected device and remaps shared data memory so that the new device's channels are available. The currently selected device is the only device affected by commands such as START, STOP, or CLEAR. Only device numbers 1 through 4 are valid for a Model 919. Only device number 1 is valid for a Model 92X.

Execution Errors:

%131128085<CR> An invalid device number was given.

SET_GAIN_ADJUSTMENT value

Sets the gain stabilization adjustment to an arbitrary value from 0 to 4095. The total range of the adjustment value represents a ±¼% change in the signal gain, with a value of 2048 representing unity gain. This adjustment is usually made only by the gain stabilizer and reset to unity with the INITIALIZE_GAIN_STABILIZATION command. Spectrum stabilization is available only on device 1. See Appendix E for more information. See also SHOW_GAIN_ADJUSTMENT.

Execution Errors:

%131134082<CR> The command was attempted when the currently selected device was other than device 1.

SET_GAIN_CHANNEL chan

Sets the center channel for the stabilizer gain peak for the currently selected device (see SET_DEVICE command). If a gain channel is chosen such that the beginning channel or ending channel would be below channel 0 or above the maximum channel as determined by the conversion gain, the gain peak width is reduced

until the peak fits the device boundaries. A gain channel and width must be set before gain stabilization can be enabled. Spectrum stabilization is available only on device 1. See Appendix E for more information.

Execution Errors:

%131128085<CR>	The specified channel number would create a peak that was less than the minimum (3 channel) width or would be outside the device's range.
%131134082<CR>	The command was attempted when the currently selected device was other than device 1.
%131136084<CR>	The command was attempted while gain stabilization was enabled.

SET_GAIN_COARSE value

Sets the 92X amplifier coarse gain. See also SHOW_GAIN_COARSE. This command is not recognized by the 919. This command is available only on Model 92X MCBs.

Legal Commands:

SET_GAIN_COARSE 0<CR>	Coarse gain set to default (10X)
SET_GAIN_COARSE 20<CR>	Coarse gain set to 20X
SET_GAIN_COARSE 40<CR>	Coarse gain set to 40X
SET_GAIN_COARSE 100<CR>	Coarse gain set to 100X
SET_GAIN_COARSE 200<CR>	Coarse gain set to 200X
SET_GAIN_COARSE 500<CR>	Coarse gain set to 500X
SET_GAIN_COARSE 1000<CR>	Coarse gain set to 1000X

SET_GAIN_CONVERSION chans

Sets the conversion gain for the currently selected device (see SET_DEVICE command). The conversion gain defines the number of channels within the device that will used for spectral data. This has the effect of altering the resolution of the ADC from 14 bits (conversion gain = 16384) to 9 bits (conversion gain = 512) for the device. Each device in a Model 919 may have independent conversion gain settings. See also SHOW_GAIN_CONVERSION.

Legal Commands:

SET_GAIN_CONVERSION 0<CR>	Conv. gain set to default (16384)
SET_GAIN_CONVERSION 512<CR>	Conv. gain set to 512 channels
SET_GAIN_CONVERSION 1024<CR>	Conv. gain set to 1024 channels
SET_GAIN_CONVERSION 2048<CR>	Conv. gain set to 2048 channels
SET_GAIN_CONVERSION 4096<CR>	Conv. gain set to 4096 channels
SET_GAIN_CONVERSION 8192<CR>	Conv. gain set to 8192 channels
SET_GAIN_CONVERSION 16384<CR>	Conv. gain set to 16384 channels

SET_GAIN_FINE value

This command sets the fine gain for the Model 92X internal amplifier. The fine gain is set in terms of a number that represents a fractional gain multiplier. The minimum acceptable fine gain setting is 1638 which represents 0.4X. The maximum acceptable fine gain setting is 4095 which represents 1.0X. See also SHOW_GAIN_FINE. This command is available only on Model 92X MCBs.

Legal Commands:

SET_GAIN_FINE 1638<CR>	Fine gain set to approximately 0.400000X
SET_GAIN_FINE 1639<CR>	Fine gain set to approximately 0.400244X
SET_GAIN_FINE 1640<CR>	Fine gain set to approximately 0.400488X
... ...	
SET_GAIN_FINE 4093<CR>	Fine gain set to approximately 0.999512X
SET_GAIN_FINE 4094<CR>	Fine gain set to approximately 0.999756X
SET_GAIN_FINE 4095<CR>	Fine gain set to approximately 1.000000X

SET_GAIN_PRESET count

Sets the Gauss mode stabilization preset for the gain peak. The preset represents the minimum number of incremental counts that must be collected in any one channel of the gain peak before the gain is evaluated by the stabilizer and potentially adjusted. Spectrum stabilization is available only on device 1. See Appendix E for more information. See also SHOW_GAIN_PRESET.

SET_GAIN_WIDTH chans

Sets the width in channels for the stabilizer gain peak for the currently selected device (see SET_DEVICE command). The gain width must be chosen such that the beginning channel is no lower than channel 0 and the ending channel is no higher than the maximum channel as determined by the conversion gain. The gain channel and width must be set before gain stabilization can be enabled. The absolute minimum width for the gain peak is 3 channels, and the absolute maximum width for the gain peak is 256 channels in Gauss mode. In point mode there is no maximum peak width, though the chosen width must allow the peak to fit within the device's channel limits as stated above. Spectrum stabilization is available only on device 1. See Appendix E for more information. See also SHOW_GAIN_WIDTH, SET_GAIN_CHANNEL and SHOW_GAIN_CHANNEL.

Execution Errors:

%131128085<CR>	The specified number of channels would create a peak that was less than the minimum (3 channel) width or would be outside the device's range.
%131134082<CR>	The command was attempted when the currently selected device was other than device 1.
%131136084<CR>	The command was attempted while gain stabilization was enabled.

SET_GATE_ANTICOINCIDENT

Causes the 919/92X MCB to expect the ADC gate input signal in anticoincident mode. See the section on the ADC gate input for more information. See also SET_GATE_OFF, SET_GATE_COINCIDENT, and SHOW_GATE.

SET_GATE_COINCIDENT

Causes the 919/92X MCB to expect the ADC gate input signal in coincident mode. See the section on the ADC gate input for more information. See also SET_GATE_OFF, SET_GATE_ANTICOINCIDENT, and SHOW_GATE.

SET_GATE_OFF

Causes the 919/92X MCB to ignore the state of the ADC gate input signal. See the section on the ADC gate input for more information. See also SET_GATE_COINCIDENT, SET_GATE_ANTICOINCIDENT and SHOW_GATE.

SET_INTEGRAL_PRESET count

Sets the ROI integral preset for the currently selected device to the specified count. During data acquisition when the sum of the counts contained in the channels of a device that have the ROI flag set reaches the integral preset count, the preset is complete and the acquisition is stopped. The actual number of counts in the ROI integral may exceed the preset value by up to 512 counts due to the pipelined architecture of the Model 919/92X. Setting an integral preset to 0 counts disables the preset. The integral preset may be set to from 0 (disabled) to 4294967295 counts. See also CLEAR_PRESETS and SHOW_INTEGRAL_PRESET.

Execution Errors:

%131135083<CR>	The command was attempted while spectrum acquisition was in progress. No action was taken.

SET_LIVE ticks

Sets the live-time counter for the currently selected device to the specified number of ticks. The number represents live time in units of 20 milliseconds (50 ticks per second). Normally this value is set by the Model 919/92X during data acquisition. See also CLEAR_COUNTERS and SHOW_LIVE.

Execution Errors:

%131135083<CR>	The command was attempted while spectrum acquisition was in progress. No action was taken.

SET_LIVE_PRESET ticks

Sets the live-time preset for the currently selected device to the specified number of ticks. During data acquisition when the live-time counter reaches the preset number of ticks, the preset is complete and the acquisition is stopped. Setting a live-time preset to 0 ticks disables the preset. See also CLEAR_PRESETS and SHOW_LIVE_PRESET.

Execution Errors:

%131135083<CR>	The command was attempted while spectrum acquisition was in progress. No action was taken.

SET_MODE_GAUSS

Sets the method of stabilization for both gain and zero stabilization peaks to Gauss mode. The maximum peak width is 256 channels in Gauss mode, so that either the gain or zero (or both) peak(s) may be reduced in width.

Spectrum stabilization is available only on device 1. See Appendix E for more information. See also SET_MODE_POINT.

SET_MODE_POINT
Sets the method of stabilization for both gain and zero stabilization peaks to point mode. Spectrum stabilization is available only on device 1. See Appendix E for more information. See also SET_MODE_GAUSS.

SET_OUTPUT_HIGH [output-num]
Sets the Change Sample output to a high level. If output-num is provided, it must be zero. This parameter is provided for compatibility with other ORTEC modules.

SET_OUTPUT_LOW [output-num]
Sets the Change Sample output to a low level. If output-num is provided, it must be zero. This parameter is provided for compatibility with other ORTEC modules.

SET_PEAK_PRESET count
Sets the ROI peak preset for the currently selected device to the specified count. During data acquisition when the contents of any channel of a device that has the ROI flag set reaches the peak preset count, the preset is complete and the acquisition is stopped. The actual number of counts in the ROI peak may exceed the preset value by a small number of counts due to the pipelined architecture of the Model 919/92X. Setting a peak preset to 0 counts disables the preset. The peak preset may be set to from 0 (disabled) to 2147483647 counts. See also CLEAR_PRESETS and SHOW_PEAK_PRESET.

Execution Errors:

%131135083<CR>	The command was attempted while spectrum acquisition was in progress. No action was taken.

SET_RADIX_BINARY
This command is provided for compatibility with other ORTEC MCBs. It specifies that binary records are to be used by the WRITE command for sending spectral data to the host computer via the serial line. This is the only radix supported by the Model 919/92X MCBs.

SET_ROI start_chan,number_of_chans
Sets the ROI flags for the specified channels in the currently selected device (see SET_DEVICE command). This command can be used multiple times to set ROI flags without affecting previously set flags. ROI flags specify channels within a device that are considered for ROI integral and ROI peak presets.

SET_SEGMENT number
Provided for compatibility with Model 918-type MCBs. This command has no effect for Model 919 or 92X MCBs. The segment number may be any value from 1 through 16.

Execution Errors:

%131128085<CR>	The specified segment number was either zero or a value greater than 16.

SET_SHAPING time
Sets the shaping time in the 92X internal amplifier to either 2 or 6 μs. This command is available only on Model 92X MCBs.

Legal Commands:

SET_SHAPING 200<CR>	Sets the shaping time to 2 μs
SET_SHAPING 600<CR>	Sets the shaping time to 6 μs

Execution Errors:

%131128085<CR>	The specified time was a value other than 200 or 600

SET_TIME hour,min,sec
Sets the time stored in the battery backed-up system clock to the specified values. Hour may be any value from 0 to 23. Min and sec may be any value from 0 through 59. The current date and time are stored for a device when an acquisition is started. See also SHOW_TIME, SET_DATE, SHOW_DATE, SET_TIME_START, and SHOW_TIME_START.

Execution Errors:

%131137085<CR>	The time could not be set due to a hardware malfunction. Hardware service may be required.

SET_TIME_START hour,min,sec

Sets the start time for the currently selected device (see SET_DEVICE command) to the specified values. Normally the start date and time are set automatically whenever a device is started with the START command. See also SHOW_TIME_START, SET_DATE_START, SHOW_DATE_START, SET_DATE and SET_TIME.

SET_TRUE ticks

Sets the truetime counter for the currently selected device to the specified number of ticks. The number represents truetime in units of 20 milliseconds (50 ticks per second). Normally this value is set by the Model 919/92X during data acquisition. See also CLEAR_COUNTERS and SHOW_TRUE.

Execution Errors:

%131135083<CR>	The command was attempted while spectrum acquisition was in progress. No action was taken.

SET_TRUE_PRESET ticks

Sets the truetime preset for the currently selected device to the specified number of ticks. During data acquisition when the truetime counter reaches the preset number of ticks, the preset is complete and the acquisition is stopped. Setting a truetime preset to 0 ticks disables the preset. See also CLEAR_PRESETS and SHOW_TRUE_PRESET.

Execution Errors:

%131135083<CR>	The command was attempted while spectrum acquisition was in progress. No action was taken.

SET_WIDTH bytes

Sets the maximum number of bytes that may be sent to the host computer by the WRITE command.

Legal Commands:

SET_WIDTH 0<CR>	Width set to default (512)
SET_WIDTH 12<CR>	Width set to minimum value of 12 bytes
...	...
SET_WIDTH 512<CR>	Width set to maximum value of 512 bytes

SET_WINDOW [start, length]

Sets the window-of-interest for the currently selected device (see SET_DEVICE command) to the specified start channel and number of channels. The channels of spectral data in the window-of-interest are affected by commands such as CLEAR, SET_DATA, and WRITE. If neither start or length is provided, the window is set to the maximum size allowed by the conversion gain specified for the currently selected device. The window-of-interest is always set to the maximum size after a SET_DEVICE command or a SET_SEGMENT command.

Execution Errors:

%131128085<CR>	The start channel was too high for the currently selected device's conversion gain.
%131129086<CR>	The length specified one or more channels that were too high for the currently selected device's conversion gain.
%131132080<CR>	The start channel was specified without a length. If one value is given the other must be also given.

SET_ZERO_ADJUSTMENT value

Sets the zero stabilization adjustment to an arbitrary value from 0 to 4095. The total range of the adjustment value represents a ±50 mV change in the signal offset (±25 mV on Model 92X) with a value of 2048 representing unity offset. This adjustment is usually only made by the gain stabilizer and reset to unity with the INITIALIZE_ZERO_STABILIZATION command. Spectrum stabilization is available only on device 1. See Appendix E for more information. See also SHOW_ZERO_ADJUSTMENT.

Execution Errors:

%131134082<CR>	The command was attempted when the currently selected device was other than device 1.

SET_ZERO_CHANNEL chan

Sets the center channel for the stabilizer zero peak for the currently selected device (see SET_DEVICE command). If a zero channel is chosen such that the beginning channel or ending channel would be below channel 0 or above the maximum channel as determined by the conversion gain, the zero peak width is reduced

until the peak fits the device boundaries. A zero channel and width must be set before zero stabilization can be enabled (see ENABLE_ZERO_STABILIZATION). Spectrum stabilization is available only on device 1. See Appendix E for more information.

Execution Errors:

%131128085<CR>	The specified channel number would create a peak that was less than the minimum (3 channel) width or would be outside the device's range.
%131134082<CR>	The command was attempted when the currently selected device was other than device 1.
%131136084<CR>	The command was attempted while zero stabilization was enabled.

SET_ZERO_PRESET count

Sets the Gauss mode stabilization preset for the zero peak. The preset represents the minimum number of incremental counts that must be collected in any one channel of the zero peak before the zero offset is evaluated by the stabilizer and potentially adjusted. Spectrum stabilization is available only on device 1. See Appendix E for more information. See also SHOW_ZERO_PRESET.

SET_ZERO_WIDTH chans

Sets the width in channels for the stabilizer zero peak for the currently selected device (see SET_DEVICE command). The zero width must be chosen such that the beginning channel is no lower than channel 0 and the ending channel is no higher than the maximum channel as determined by the conversion gain. The zero channel and width must be set before zero stabilization can be enabled. The absolute minimum width for the zero peak is 3 channels, and the absolute maximum width for the zero peak is 256 channels in Gauss mode. In point mode there is no maximum peak width, though the chosen width must allow the peak to fit within the device's channel limits as stated above. Spectrum stabilization is available only on device 1. See Appendix E for more information.

Execution Errors:

%131128085<CR>	The specified number of channels would create a peak that was less than the minimum (3 channel) width or would be outside the devices range.
%131134082<CR>	The command was attempted when the currently selected device was other than device 1.
%131136084<CR>	The command was attempted while zero stabilization was enabled.

SHOW_ACTIVE

Returns a 1 if the currently selected device (see SET_DEVICE command) is active, acquiring spectral data, or 0 if it is not active.

Responses:

$C00000087<CR>	The currently selected device is not active
$C00001088<CR>	The currently selected device is active

SHOW_ACTIVE_DEVICES

Returns a bit mask of the currently active devices as follows:

Responses:

$C00000087<CR>	No devices are active
$C00001088<CR>	Only device 1 is active
$C00002089<CR>	Only device 2 is active (Model 919 only)
$C00003090<CR>	Devices 1 and 2 are active (Model 919 only)
$C00004091<CR>	Device 3 is active (Model 919 only)
...	...
$C00014092<CR>	Devices 2, 3 and 4 are active (Model 919 only)
$C00015093<CR>	Devices 1, 2, 3 and 4 are all active (Model 919 only)

SHOW_ALARM

Returns a record that indicated whether the alarm responses are enabled or disabled for a communication path. If SHOW_ALARM is received on the serial line, the response represents whether alarms are enabled for the serial line. If SHOW_ALARM is received by the mailbox, the response represents whether alarms are enabled for the mailbox.

Responses:

$IT<CR>	Alarms are enabled for the specified communication path
$IF<CR>	Alarms are disabled for the specified communication path

SHOW_CONFIGURATION

Returns a record that indicates the hardware configuration of the MCB. The record contains information about the number of segments in an MCB device (always one for all Model 919 and Model 92X devices), and the current conversion gain for each segment. Note that in a Model 919 MCB this record changes, depending on which of the four possible devices is selected at the time the SHOW_CONFIGURATION command is issued. See the SET_DEVICE command for more information. The record is organized as follows:

$J1638400001aaaaa00000" 65 zeros here for total of 75 zeros "00000ccc

Where aaaaa represents the conversion gain for the one and only segment in the currently selected device, and ccc represents the record checksum. See the section on response records in this appendix for more information about response records and checksums.

SHOW_DATE

Returns the day, month and year of the current date as maintained in the 919/92X battery backed-up real time clock in the form dddmmmyy. The day is returned as a 3-digit integer number from 001 through 031. The month is returned as a 3-digit integer number from 001 through 012. And the year is returned as a 3-digit integer number from 000 through 099. See also SET_DATE_START.

Responses:

$N001001088052<CR>	Date reported as Jan 1, 1988
...	...
$N031012009959<CR>	Date reported as Dec 31, 1999
$N001001000036<CR>	Date reported as Jan 1, 2000
...	...
$N031012008756<CR>	Date reported as Dec 31, 2087

SHOW_DATE_START

Returns the day, month and year of the acquisition start date for the currently selected device in the form dddmmmyyy. The day is returned as a 3-digit integer number from 001 through 031. The month is returned as a 3-digit integer number from 001 through 012. And the year is returned as a 3-digit integer number from 000 through 099. See also SET_DATE_START.

Responses:

$N001001088052<CR>	Start date reported as Jan 1, 1988
...	...
$N031012009959<CR>	Start date reported as Dec 31, 1999
$N001001000036<CR>	Start date reported as Jan 1, 2000
...	...
$N031012008756<CR>	Start date reported as Dec 31, 2087

SHOW_DEVICE

Returns the number of the currently selected device (see SET_DEVICE command). See also START and STOP.

Responses:

$A001246<CR>	Device number 1 is currently selected device
$A002247<CR>	Device number 2 is currently selected device
$A003248<CR>	Device number 3 is currently selected device
$A004249<CR>	Device number 4 is currently selected device

SHOW_GAIN_ADJUSTMENT

Returns the current gain peak stabilization adjustment as a number from 0 to 4096. This value changes dynamically when gain stabilization is enabled. Spectrum stabilization is available only on device 1. See Appendix E for more information. See also SET_GAIN_ADJUSTMENT.

Responses:

$C00000087<CR>	Gain adjustment reported as 0 (-.49971%)
$C00001088<CR>	Gain adjustment reported as 1 (-.49947%)
...	...
$C02047100<CR>	Gain adjustment reported as 2047 (-.000244%)
$C02048101<CR>	Gain adjustment reported as 2048 (0.0%)
$C02049102<CR>	Gain adjustment reported as 2049 (+.000244%)

$C04094104<CR>	Gain adjustment reported as 4094 (+.49947%)
$C04095105<CR>	Gain adjustment reported as 4095 (+.49971%)

Execution Errors:

%131134082<CR>	The command was attempted when the currently selected device was other than device 1.

SHOW_GAIN_CHANNEL

Reports the current center channel for the stabilizer gain peak for the currently selected device. Spectrum stabilization is available only on device 1. See Appendix E for more information. See also SET_GAIN_CHANNEL.

Responses:

$C00000087<CR>	Gain channel has not been set.
$C00002089<CR>	Gain channel is chan. 2 (lowest possible channel)
...	...
$C16382107<CR>	Gain channel is chan. 16382 (highest possible channel)

Execution Errors:

%131134082<CR>	The command was attempted when the currently selected device was other than device 1.

SHOW_GAIN_COARSE

Returns the coarse gain for the Model 92X internal amplifier. In operation, the resulting signal gain is the product of the coarse gain, the fine gain, and the super-fine gain (used by stabilizer). The coarse gain is returned in terms of an integer gain multiplier. This command is available only on Model 92X MCBs.

Responses:

$C00010088<CR>	Coarse gain reported as 10X
$C00020089<CR>	Coarse gain reported as 20X
$C00040091<CR>	Coarse gain reported as 40X
$C00100088<CR>	Coarse gain reported as 100X
$C00200089<CR>	Coarse gain reported as 200X
$C00500092<CR>	Coarse gain reported as 500X
$C01000088<CR>	Coarse gain reported as 1000X

SHOW_GAIN_CONVERSION

This command returns the conversion gain for the currently selected device (see SET_DEVICE command).

Responses:

$C00512095<CR>	Conversion gain reported as 512 channels
$C01024094<CR>	Conversion gain reported as 1024 channels
$C02048101<CR>	Conversion gain reported as 2048 channels
$C04096106<CR>	Conversion gain reported as 4096 channels
$C08192107<CR>	Conversion gain reported as 8192 channels
$C16384109<CR>	Conversion gain reported as 16384 channels

SHOW_GAIN_FINE

This command returns the fine gain for the Model 92X internal amplifier. The fine gain is returned in terms of a fractional gain multiplier. Multiply the reported fine gain by 1/4095 to calculate the fine gain multiplier. The fine gain will never be less than 1638 or 0.400000X. This command is available only on Model 92X MCBs.

Responses:

$C01638105<CR>	Fine gain reported as approximately 0.400000X
$C01639106<CR>	Fine gain reported as approximately 0.400244X
$C01640098<CR>	Fine gain reported as approximately 0.400488X
...	...
$C04093103<CR>	Fine gain reported as approximately 0.999512X
$C04094104<CR>	Fine gain reported as approximately 0.999756X
$C04095105<CR>	Fine gain reported as approximately 1.000000X

SHOW_GAIN_PRESET

Reports the Gauss mode stabilization preset for the gain peak. The preset represents the minimum number of incremental counts that must be collected in any one channel of the gain peak before the gain is evaluated by the stabilizer and potentially adjusted. Spectrum stabilization is available only on device 1. See Appendix E for more information. See also SET_GAIN_PRESET and CLEAR_PRESETS.

Responses:

$G0000000010076<CR>	Gain preset currently 10 counts (minimum)
$G0000000011076<CR>	Gain preset currently 11 counts
...	...
$G2147483647121<CR>	Gain preset currently 2147483647 counts (max)

Execution Errors:

%131134082<CR>	The command was attempted when the currently selected device was other than device 1.

SHOW_GAIN_STABILIZATION

Reports the state of gain peak stabilization. Spectrum stabilization is available only on device 1. See Appendix E for more information. See also ENABLE_GAIN_STABILIZATION and DISABLE_GAIN_STABILIZATION.

Responses:

$IT<CR>	Gain stabilization is currently enabled
$IF<CR>	Gain stabilization is currently disabled

Execution Errors:

%131134082<CR>	The command was attempted when the currently selected device was other than device 1.

SHOW_GAIN_WIDTH

Reports the current width for the stabilizer gain peak for the currently selected device. Spectrum stabilization is available only on device 1. See Appendix E for more information. See also SET_GAIN_WIDTH, SET_GAIN_CHANNEL, and SHOW_GAIN_CHANNEL.

Responses:

$C00001088<CR>	Gain width has not been set.
$C00003089<CR>	Gain width is 3 chans. (lowest possible width)
...	...
$C00256100<CR>	Gain width is 256 chans. (highest possible width in Gauss mode)
...	...
$C16383108<CR>	Gain width is 16383 chans (highest possible width in point mode with gain channel set to 8192)

Execution Errors:

%131134082<CR>	The command was attempted when the currently selected device was other than device 1.

SHOW_GATE

Reports the current mode of operation of the ADC gate input. See Section 2.2 on ADC gate input for more information. See also SET_GATE_OFF, SET_GATE_COINCIDENT, and SET_GATE_ANTICOINCIDENT.

Responses:

$FOFF<CR>	Reports the ADC gate is off or ignored
$FCOI<CR>	Reports the ADC gate is in coincident mode
$FANT<CR>	Reports the ADC gate is in anticoincident mode

SHOW_HV

This command is available only on Model 92X MCBs. Reports the current high voltage and the status of the high voltage power supply in the form $Dvvvvvsssssccc. vvvv represents the current output voltage if the high voltage is enabled, or the rear-panel high voltage setting if the high voltage is disabled. sssss represents the status of the high voltage bias supply as a 16-bit decimal number with the following bit definitions:

Bit 0(LSB):	Bias Supply Polarity (0 = positive, 1 = negative)
Bit 1:	Bias Supply Overload (0 = overload, 1 = normal)
Bit 2:	High voltage Enabled (0 = disabled, 1 = enabled)

Example Responses:

$D0200000003077<CR>	2000 volts, Negative, Not Overloaded, Disabled
$D0200000002076<CR>	2000 volts, Positive, Not Overloaded, Disabled
$D0200000007082<CR>	2000 volts, Negative, Not Overloaded, Enabled

SHOW_INPUT [0]

Reports the state of the Sample Ready input. See also PAUSE_INPUT, PAUSE_INPUT_HIGH, and PAUSE_INPUT_LOW.

Responses:

$C00000087<CR>	Sample Ready input is low
$C00001088<CR>	Sample Ready input is high

SHOW_INTEGRAL [start_chan,number_of_chans]

Reports the sum of the specified group of spectral data channels for the currently selected device (see SET_DEVICE command). If start_chan and number_of_chans is not provided, SHOW_INTEGRAL reports the sum of all channels in the currently selected segment that have their ROI flag set.

Responses:

$G0000000000075<CR>	Integral reported as 0
...	...
$G4294967294131<CR>	Integral reported as 4294967294
$G4294967295132<CR>	Integral reported as greater than or equal to 4294967295 (maximum reportable value)

SHOW_INTEGRAL_PRESET

Reports the current ROI integral preset value for the currently selected device (see SET_DEVICE command). See SET_INTEGRAL_PRESET for more information about the ROI integral preset. See also SHOW_INTEGRAL.

Responses:

$G0000000000075<CR>	Integral preset reported as 0
...	...
$G4294967295132<CR>	Integral reported as 4294967295

SHOW_LIVE

Reports the contents of the live-time counter for the currently selected device in units of 20 milliseconds (50 ticks per second). See also CLEAR_COUNTERS and SET_LIVE.

Responses:

$G0000000000075<CR>	Live time reported as 0 ticks
$G0000000001076<CR>	Live time reported as 1 tick (20 milliseconds)
...	...
$G4294967295132<CR>	Live time reported as 4294967295 ticks (over 23000 days)

SHOW_LIVE_PRESET

Reports the current live-time preset for the currently selected device in units of 20 milliseconds (50 ticks per second). See also CLEAR_PRESETS and SET_LIVE_PRESET.

Responses:

$G0000000000075<CR>	Live-time preset reported as disabled.
$G0000000001076<CR>	Live-time preset reported as 1 tick.
...	...
$G4294967295132<CR>	Live-time preset reported as 4294967295 ticks.

SHOW_MODE

This command is for compatibility with Model 918 systems. It always reports that the 919/92X operates in pulse height analysis mode.

Responses:

$FPHA<CR>

SHOW_MODE_STAB

Reports the current stabilization mode of operation. Spectrum stabilization is available only on device 1. See Appendix E for more information. See also SET_MODE_POINT and SET_MODE_GAUSS.

Responses:

$FPOINT<CR>

$FGAUSS<CR>

SHOW_NEXT

Used in conjunction with the SHOW_ROI command, SHOW_NEXT reports the next continuous group of channels in the currently selected device (see SET_DEVICE command) that have the ROI flag set. The response is of the form: $Dsssssnnnnnccc<CR> where sssss represents an integer number that is the number of the first channel of the "next" group of channels that all have their ROI bit set, and nnnnn represents an integer number that is the number of channels in the group. If no more channels have their ROI bit set, SHOW_NEXT returns a first channel of 0 and a number of channels of 0. The SHOW_ROI command is used to report the "first" group of channels that all have their ROI bit set.

Example Responses:

$D0100000050078<CR>	Next ROI group starts at chan 1000 and is 50 chans long
$D0215000150086<CR>	Next ROI group starts at chan 2150 and is 150 chans long
$D0000000000072<CR>	No other ROI groups to report

SHOW_OUTPUT [0]

Reports the status of the "Change Sample" output port. The output port status is reported as a 16-bit number that is either 0 or 1, depending on the level last set by a SET_OUTPUT_HIGH or SET_OUTPUT_LOW command.

Responses:

$C00000087<CR>	Change Sample output currently at a low level
$C00001088<CR>	Change Sample output currently at a high level

SHOW_OVERFLOW_PRESET

Reports the state of the overflow preset for the currently selected device (see SET_DEVICE command).

Responses:

$IT<CR>	Overflow preset enabled for the currently selected device
$IF<CR>	Overflow preset disabled for the currently selected device

SHOW_PEAK

This command returns the contents of the ROI channel with the largest number of counts. An ROI channel is a channel that has the ROI flag set. The maximum possible value is 2147483647, which is the maximum number of counts that can be stored in a 31-bit channel.

Responses:

$G0000000000075<CR>	Maximum count in an ROI channel is zero or no ROI channels were found.
$G0000000001076<CR>	Maximum count in an ROI channel is 1.
...	...
$G2147483646120<CR>	Maximum count in an ROI channel is 2147483646.
$G2147483647121<CR>	Maximum count in an ROI channel is 2147483647.

SHOW_PEAK_CHANNEL

This command returns the number of the ROI channel with the largest number of counts. An ROI channel is a channel that has the ROI flag set. The lowest number ROI channel with the largest count is reported if more that one channel contains the largest number of counts. Channel 16383 is the highest numbered channel in any device.

Responses:

$C00000087<CR>	Maximum count was found in channel 0 or no ROI channels were found (see errors below).
$C00001088<CR>	Maximum count was found in channel 1.
...	...
$C16382107<CR>	Maximum count was found in channel 16382.
$C16383108<CR>	Maximum count was found in channel 16383.

SHOW_PEAK_PRESET

Reports the value of the ROI peak preset for the currently selected device. See SET_PEAK_PRESET for information about the ROI peak preset.

Responses:

$G00000000000075<CR>	Peak preset disabled.
$G0000000001076<CR>	Peak preset set to 1 count.
...	...
$G2147483646120<CR>	Peak preset set to 2147483646 counts.
$G2147483647121<CR>	Peak preset set to 2147483647 counts.

SHOW_PZADJUST_AUTO

This command is available only on Model 92X MCBs. Returns the amplifier operating mode as described below.

Responses:

$IT<CR>	Current operating mode is automatic PZ
$IF<CR>	Current operating mode is transistor reset

SHOW_RADIX

This command is for compatibility with other EG&G ORTEC MCBs. It always reports that the number base radix for the WRITE command is binary.

Responses:

$FBIN<CR>	Number base set to binary radix

SHOW_ROI

Used in conjunction with the SHOW_NEXT command, SHOW_ROI reports the first continuous group of channels in the currently selected device (see SET_DEVICE command) that have the ROI flag set. The response is of the form: $Dsssssnnnnnccc<CR> where sssss represents an integer number that is the number of the first channel of the "first" group of channels that all have their ROI bit set, and nnnnn represents an integer number that is the number of channels in the group. The SHOW_NEXT command is used to report the "next" group of channels that all have their ROI bit set.

Responses:

$D0100000050078<CR>	First ROI group starts at chan 1000 and is 50 chans long
$D0215000150086<CR>	First ROI group starts at chan 2150 and is 150 chans long
$D00000000000072<CR>	No ROI groups to report

SHOW_SEGMENT

This command is for compatibility with other EG&G ORTEC MCBs. It reports the last value that was set with the SET_SEGMENT command. Segments have no meaning in 919/92X MCBs.

Responses:

$A001246<CR>	Segment last set to 1
$A002247<CR>	Segment last set to 2
...	...
$A016252<CR>	Segment last set to 16

SHOW_SHAPING

Reports the 92X internal amplifier shaping time as set by the last SET_SHAPING command. This command is available only on Model 92X MCBs.

Responses:

$C00200089<CR>	Shaping time currently set to 2 μs
$C00600093<CR>	Shaping time currently set to 6 μs

SHOW_STATUS

Returns system status information in the following format:

$MIIIIIIIIIIttttttttttaaaaahhhhhccc<CR>

where IIIIIIIII represents the live time for the currently selected device as returned by the SHOW_LIVE command, tttttttttt represents the truetime for the current device as returned by the SHOW_TRUE command, aaaaa represents the active device mask as returned by the SHOW_ACTIVE_DEVICES command, and hhhhh represents the hardware status, which is an ASCII representation of a 16 bit decimal number with the following bit definitions:

Bit 0 (LSB):	Bias Supply Polarity (0 = positive, 1 = negative)
Bit 1:	Bias Supply Overload (0 = overload, 1 = normal)
Bit 2:	High Voltage Enabled (0 = disabled, 1 = enabled)
Bits 3:	Unused
Bit 4:	Amplifier PZ'd since initialization (0 = normal, 1 = needs PZ'ing)
Bits 5-7:	Unused
Bit 8:	Amplifier Automatic PZ (1 = Auto PZ in progress, 0 = normal)
Bits 9-14:	Unused
Bit 15 (MSB):	RESERVED

SHOW_TIME

Reports the time from the battery backed-up system clock in the form: **$Nhhhmmmssscc<CR>** where hhh represents a 3-digit integer hour (0 through 23), mmm represents a 3-digit integer minute (0 through 59), and sss represents a 3-digit integer second (0 through 59). See also SET_TIME, SET_DATE, and SHOW_DATE.

Example Responses:

$N010054017052<CR>	Time returned 10:54:17 (10 hours, 54 min, 17 sec)
$N020013037050<CR>	Time returned 20:13:37 (20 hours, 13 min, 37 sec)

SHOW_TIME_START

Reports the time of the last START command for the currently selected device in the form: **$Nhhhmmmssscc<CR>** where hhh represents a 3-digit integer hour (0 through 23), mmm represents a 3-digit integer minute (0 through 59) and sss represents a 3-digit integer second (0 through 59). See also SET_TIME_START, SET_DATE_START, and SHOW_DATE_START.

Example Responses:

$N010054017052<CR>	Time returned 10:54:17 (10 hours, 54 min, 17 sec)
$N020013037050<CR>	Time returned 20:13:37 (20 hours, 13 min, 37 sec)

SHOW_TRUE

Reports the contents of the truetime counter for the currently selected device in units of 20 milliseconds (50 ticks per second). See also CLEAR_COUNTERS and SET_TRUE.

Responses:

$G0000000000075<CR>	Truetime reported as 0 ticks
$G0000000001076<CR>	Truetime reported as 1 tick (20 milliseconds)
...	...
$G4294967295132<CR>	Truetime reported as 4294967295 ticks (over 23000 days)

SHOW_TRUE_PRESET

Reports the current truetime preset for the currently selected device in units of 20 milliseconds (50 ticks per second). See also CLEAR_PRESETS and SET_TRUE_PRESET.

Responses:

$G0000000000075<CR>	Truetime preset reported as disabled.
$G0000000001076<CR>	Truetime preset reported as 1 tick.
...	...
$G4294967295132<CR>	Truetime preset reported as 4294967295 ticks.

SHOW_VERSION

Reports the 919/92X firmware version number in the form: **Fmmmm-vv<CR>** where mmmm is a 4-character model designator and vv is a 3-character version designator.

Example Responses:

$F0919-001<CR>	Model 919 firmware version 1 reported
$F092X-001<CR>	Model 92X firmware version 1 reported

SHOW_WIDTH

Reports the maximum number of bytes that may be sent by the 919/92X to the host computer as a result of the WRITE command. See also SET_WIDTH and WRITE.

Responses:

$C00012090<CR>	Width reported as 12 bytes (minimum width)

$C00013091<CR>	Width reported as 13 bytes
...	...
$C00512095<CR>	Width reported as 512 bytes (maximum width)

SHOW_WINDOW

Reports the start channel and number of channels that are in the window-of-interest for the currently selected device in the form:

$Dxxxxxyyyyyccc<CR>

where xxxxx is the start channel (0 through 16383) and yyyyy is the number of channels (1 through 16384). See SET_WINDOW for more information about the window-of-interest.

Example Responses:

$D0000016384094<CR>	Window-of-Interest reported as starting at channel 0 and continuing for 16384 channels
$D0000008192092<CR>	Window-of-Interest reported as starting at channel 0 and continuing for 8192 channels (first 1/2)
$D0819208192112<CR>	Window-of-Interest reported as starting at channel 8192 and continuing for 8192 channels (last 1/2)

SHOW_ZERO_ADJUSTMENT

Returns the current zero peak stabilization adjustment as a number from 0 to 4095. This value changes dynamically when zero stabilization is enabled. Spectrum stabilization is available only on device 1. See Appendix E for more information. See also SET_ZERO_ADJUSTMENT and INITIALIZE_ZERO_STABILIZATION.

Responses:

$C00000087<CR>	Zero adj. reported 0 or -50.00 mV (-25.00 mV for 92X)
$C00001088<CR>	Zero adj. reported 1 or -49.98 mV (-24.99 mV for 92X)
...	...
$C02047100<CR>	Zero adj. reported 2047 or -0.024 mV (-0.012 mV for 92X)
$C02048101<CR>	Zero adj. reported 2048 or 0.0 mV
$C02049102<CR>	Zero adj. reported 2049 or 0.024 mV (0.012 mV for 92X)
...	...
$C04094104<CR>	Zero adj. reported 4094 or 49.98 mV (24.99 mV for 92X)
$C04095105<CR>	Zero adj. reported 4095 or 50.00 mV (25.00 mV for 92X)

Execution Errors:

%131134082<CR>	The command was attempted when the currently selected device was other than device 1.

SHOW_ZERO_CHANNEL

Reports the center channel for the stabilizer zero peak for the currently selected device (see SET_DEVICE command). Spectrum stabilization is available only on device 1. See Appendix E for more information. See also SET_ZERO_CHANNEL, SET_ZERO_WIDTH and SHOW_ZERO_WIDTH.

Responses:

$C00000087<CR>	Zero channel has not been set.
$C00002089<CR>	Zero channel is chan. 2 (lowest possible channel)
...	...
$C16382107<CR>	Zero channel is chan. 16382 (highest possible channel)

Execution Errors:

%131134082<CR>	The command was attempted when the currently selected device was other than device 1.

SHOW_ZERO_PRESET

Reports the Gauss mode stabilization preset for the zero peak. The preset represents the minimum number of incremental counts that must be collected in any one channel of the zero peak before the zero offset is evaluated by the stabilizer and potentially adjusted. Spectrum stabilization is available only on device 1. See Appendix E for more information. See also SET_ZERO_PRESET and CLEAR_PRESETS.

Responses:

$G0000000010076<CR>	Zero preset currently 10 counts (minimum)
$G0000000011076<CR>	Zero preset currently 11 counts
...	...
$G2147483647121<CR>	Zero preset currently 2147483647 counts (max)

SHOW_ZERO_STABILIZATION

Reports the state of zero peak stabilization. Spectrum stabilization is available only on device 1. See Appendix E for more information. See also ENABLE_ZERO_STABILIZATION and DISABLE_ZERO_STABILIZATION.

Responses:

$IT<CR>	Zero stabilization is currently enabled
$IF<CR>	Zero stabilization is currently disabled

SHOW_ZERO_WIDTH

Reports the current width for the stabilizer zero peak for the currently selected device. Spectrum stabilization is available only on device 1. See Appendix E for more information. See also SET_ZERO_WIDTH, SET_ZERO_CHANNEL, and SHOW_ZERO_CHANNEL.

Responses:

$C00001088<CR>	Zero width has not been set.
$C00003089<CR>	Zero width is 3 chans. (lowest possible width)
...	...
$C00256100<CR>	Zero width is 256 chans. (highest possible width in Gauss mode)
...	...
$C16383108<CR>	Zero width is 16383 chans (highest possible width in point mode with zero channel set to 8192)

Execution Errors:

%131134082<CR>	The command was attempted when the currently selected device was other than device 1.

START [seg-mask]

Starts the acquisition of spectral data in the currently selected device. The optional segment mask is provided for compatibility with other MCBs and may be any value from 0 to 65535 but is ignored by the Model 919/92X.

Execution Warnings:

%000005074<CR>	The acquisition is already started (no changes made)
%000006075<CR>	A preset was exceeded (acquisition was not started)
%000016076<CR>	92X amplifier not PZ'd since initialization
%000032074<CR>	92X high voltage is disabled

The actual response record may be a combination of any of the above records depending on the warning conditions. For example:

%000048081<CR>	92X amplifier not PZ'd and high voltage disabled

START_PZADJUST_AUTO

Starts the automatic PZ process. The automatic PZ is not complete until indicated by the auto PZ status bit. This bit is returned by the SHOW_STATUS command. Spectral data can be corrupted if automatic PZ is initiated while a device is collecting data. This command is available only on Model 92X MCBs.

Execution Errors:

%131136084<CR>	The command was attempted while the amplifier was set for a transistor reset preamplifier. No action was taken.

STEP_GAIN_COARSE

Increases Model 92X internal amplifier coarse gain to the next higher setting. See also SET_GAIN_COARSE and SHOW_GAIN_COARSE. This command is available only on Model 92X MCBs.

Responses:

$C00020089<CR>	Coarse gain increased to 20X
$C00040091<CR>	Coarse gain increased to 40X
$C00100088<CR>	Coarse gain increased to 100X
$C00200089<CR>	Coarse gain increased to 200X
$C00500092<CR>	Coarse gain increased to 500X

$C01000088<CR>	Coarse gain increased to 1000X
Execution Errors:	
%131136084<CR>	Coarse gain could not be set higher than 1000X

STEP_GAIN_FINE

Increases Model 92X internal amplifier fine gain to the next higher setting. See also SET_GAIN_FINE and SHOW_GAIN_FINE. This command is available only on Model 92X MCBs.

Responses:	
$C01639106<CR>	Fine gain increased to approximately 0.400244X
$C01640098<CR>	Fine gain increased to approximately 0.400488X
...	...
$C04093103<CR>	Fine gain increased to approximately 0.999512X
$C04094104<CR>	Fine gain increased to approximately 0.999756X
$C04095105<CR>	Fine gain increased to approximately 1.000000X
Execution Errors:	
%131136084<CR>	Fine gain could not be set higher than 1.000000X

STEP_OUTPUT [0]

Causes a pulse to be output on the Change Sample output port. The level of the Change Sample output is changed then returned to the level present when the STEP_OUTPUT command is received. The duration of the intermediate level varies but is never less than 2 μs. Use the SET_OUTPUT_HIGH or SET_OUTPUT_LOW commands to establish an initial output level.

Responses:	
$C00000087<CR>	The initial and final level on Change Sample was low
$C00001088<CR>	The initial and final level on Change Sample was high

STOP [seg-mask]

Stops the acquisition of spectral data in the currently selected device. The optional segment mask is provided for compatibility with other MCBs and may be any value from 0 to 65535 but is ignored by the Model 919/92X.

Execution Warnings:	
%000005074	Acquisition already stopped (no changes made)

TERMINAL

Prepares the serial line for communication with a terminal. In terminal mode, text sent to the 919/92X echoes back to the host and response records sent to the host by the 919/92X are terminated with a carriage return and line feed. This command has no effect when sent via the mailbox. See also COMPUTER.

TEST mask

Performs any combination of the 919/92X internal selftests where mask represents a 16 bit integer with each bit set specifying a test as follows:

Bit 0 (LSB):	ROM checksum test (nondestructive)
Bit 1:	Spectral data memory test (destroys spectral data)
Bit 2:	Processor memory test (destroys spectral data)
Bit 3:	Serial line test (serial loop-back connector required)
Bit 4:	RESERVED
Bit 5:	Mailbox memory test (may cause mailbox comm error)
Execution Errors:	
%004002075<CR>	ROM1 failed test
%004004077<CR>	ROM2 failed test
%004008081<CR>	Processor Memory failed test
%004016080<CR>	Spectral Data Memory or Mailbox Memory failed test
%004032078<CR>	RESERVED
%004064083<CR>	Serial Line failed test

The actual response record may be a combination of any of the above records depending on the selftests performed. For example:

%004006079<CR>	ROM1 and ROM2 both failed test
%004010074<CR>	Processor Memory and ROM1 both failed test

WRITE

Starts the transmission of the spectral data in the window-of-interest (see SET_WINDOW command) for the currently selected device (see SET_DEVICE command) from the 919/92X MCB to the host computer. The WRITE command responds with a binary data record as follows:

#BIIcc?111122223333 ... nnnns

In this record II represents a 16-bit binary integer that is the record length, cc represents a 16-bit binary integer that is the number of the first channel in the record, ? is an unused byte, 1111 represents a 32-bit binary integer that is the contents of the first channel in the record, 2222 represents the second channel in the record, etc., nnnn represents the nth channel in the record, and s represents an 8-bit binary checksum of the entire record up to the checksum byte itself.

After the 919/92X MCB responds with a binary data record, the host computer must prompt for the next record with one of the following handshake prompts: **GO<CR>**, **RE<CR>**, or **HA<CR>**. GO causes the next binary data record to be sent by the 919/92X or the **%** response if the last record has already been sent. RE causes the previous binary data record to be resent exactly as it was the last time. HA causes the WRITE command to be halted and responds with a **%130131078<CR>** record.

The number of channels that are sent on a binary data record depends on the record width as set by the SET_WIDTH command and the number of channels remaining in the window-of-interest to be sent. If the record is the last record to be sent, it will contain the number of channels remaining in the window-of-interest. This may or may not be the same number of channels as the previous record(s). If the record is not the last record to be sent, it will contain as many channels as will fit without creating a binary data record that is longer than the limit set by the SET_WIDTH command. The following formula can be used to determine the number of channels that will be sent on a record that isn't the last record:

CHANS = (WIDTH - 8) / 4

In the above formula CHANS is the integer number of channels that will be sent on the record and WIDTH is the current record width as set by the SET_WIDTH command (maximum value is 512 bytes).

APPENDIX D: AUTOMATIC POLE-ZERO

Anyone who has had previous experience with a nuclear spectroscopy system is familiar with the process of pole-zeroing an amplifier. When an amplifier is PZ'd, the amplifier is tuned to compensate for the decay time of the preamplifier pulse. The manual method of adjusting PZ required skill and effort on the part of the operator along with a good oscilloscope to achieve good energy resolution and peak position stability at moderate to high counting rates. The automatic pole-zero feature eliminates the need for a skilled operator to adjust the pole-zero of an amplifier. In the 92X, there are two modes of PZ operation. The first is AUTOMATIC PZ mode. This mode is for all resistive feedback preamplifiers. This mode is enabled by sending the ENABLE_PZ_AUTO command to the 92X. The MAESTRO II MCA Emulation program will usually take care of this for you. This would have to be done only in custom software applications. Once the ENABLE_PZ_AUTO command has been sent, the START_PZ_AUTO command would have to be given to start the pole-zero process. The process could take up to 3 minutes to complete if a very slow rate source is being used. The status of the pole-zero operation can be determined by sending the SHOW_STATUS command. The pole-zero is remembered for power outages.

If the detector you are using has a Transistor-Reset Preamplifier (TRP), the automatic PZ mode is inappropriate. When a TRP detector is in use, send the DISABLE_PZ_AUTO command to properly set the PZ. The START_PZ_AUTO is not a valid command when in this mode.

APPENDIX E: DIGITAL SPECTRUM STABILIZATION

The purpose of digital spectrum stabilization is to reduce the effects of peak drift on a spectroscopy system. A digital spectrum stabilizer serves as a feedback element in a spectroscopy system. The location of a peak (channel number) is given to the spectrum stabilizer. The stabilizer then starts "watching" the output of the ADC. If the stabilizer detects a drift in the system, the gain and/or offset of the amplifier output is adjusted to keep the peak at the desired channel.

Two algorithms are provided in the 92X. The first is the well known method used in most stabilizers where the gain and/or offset of the amplifier is adjusted by a small amount after each data point. This algorithm is referred to as POINT MODE in this document. The second algorithm consists of collecting a set amount of data and fitting a Gaussian to the data to determine if any peak shift has occurred and to correct for it.

Point Mode Stabilization

In POINT MODE the gain and/or offset of the unit is changed on every data point that falls within the window of interest. The basic setup algorithm is as follows:

When gain conversion is active, the user selects a peak to stabilize on. The highest energy peak in the spectrum is generally chosen as gain shifts are more prominent on higher energy peaks. Next, the width of the window to stabilize on is selected. The width should be chosen large enough so that there is little chance that the peak will get shifted out of the window by a sudden peak shift. However, it should be chosen small enough that only a single peak is in the window. Now the ADC and stabilizer can be started. The 92X intercepts ADC conversions and compares them to the window selected earlier. If the conversion falls outside the window, no corrections are made. If the conversion falls in the high half of the window, the gain of the stabilizer is decreased by a small amount. If the conversion falls in the low half of the window, the gain of the stabilizer is increased by a small amount.

Zero correction is very similar to gain correction except the peak of interest is generally the lowest energy peak in the spectrum. At low energies the gain adjustments have little effect on the peak location, so the adjustments made by the gain corrections have little effect on the zero corrections.

Gauss Mode Correction

In Gauss Mode, data is collected in the 92X until a peak preset expires. When the preset expires, the microprocessor in the 92X fits a Gaussian to the data to determine the centroid of the peak. This information is then used to determine how much, if any the gain and/or offset must be adjusted to keep the gain and/or zero peaks in their nominal position. When in Gauss Mode, setup is very similar to Point Mode except a few more pieces of information are required. The information required are the peak presets for the gain and zero peak. These values specify the value which any channel in the window must reach before a correction is made.

APPENDIX F: COMPATIBILITY WITH 917/918A

If a Model 92X or 919 is being added to an existing 917, 918, or 918A system, the ADCAM/IBM INTERFACE board and the DUAL-PORT MEMORY board in the MCB may need modification for proper operation. All instruments shipped from EG&G ORTEC after December 1, 1988, will be compatible with both the 919/92X and the 917/918 family of MCBs and thus will not need modification.

If the 917/918A system is attached to an IBM PS/2 system (Model 50,60,80) or compatible, the 918A-OPT E and 918A-OPT 5 modifications are necessary. If the 917/918A system is attached to an IBM PC, XT, AT, or compatible, the 918A-OPT B modifications and the 918A-OPT 5 modifications are required.

IMPORTANT: The procedures in this section of the manual describe how to modify an existing 917, 918, or 918A system to be compatible with a Model 919 or 92X. These modifications should only be made by people who are familiar with working on printed circuit boards and electronic circuits. If your system needs modification and there is no one capable of making the modifications, contact the Customer Service Department at EG&G ORTEC and arrangements will be made to make the appropriate modifications to your system.

918A-OPT B Modifications for 919/92X Compatibility

If a Model 92X or 919 is to be used with an existing 917 or 918 system, Revision A or higher of the 918A-Opt B (ADCAM/IBM interface card, part number 730040) is required for PC-Bus systems to communicate with Model 919 or 92X MCBs.

Use the following procedure to modify an earlier version of the ADCAM/IBM interface card (918A-Opt B) for use with Model 919 or 92X MCBs.

1. Disconnect pin 14 of the 37-pin "D" connector (J1) from ground by cutting the printed circuit board trace between pin 14 and pin 32 on the "D" Connector.
2. Connect pin 14 of the 37-pin "D" connector to pin 14 of U7. See Fig. F.1 to locate U7.
3. Connect pin 6 of U7 to pin 5 of U8. See Fig. F.1 to locate U8.

The above modifications have already been performed on any ADCAM/IBM Interface card (918A-Opt B) that is designated Revision A or higher.

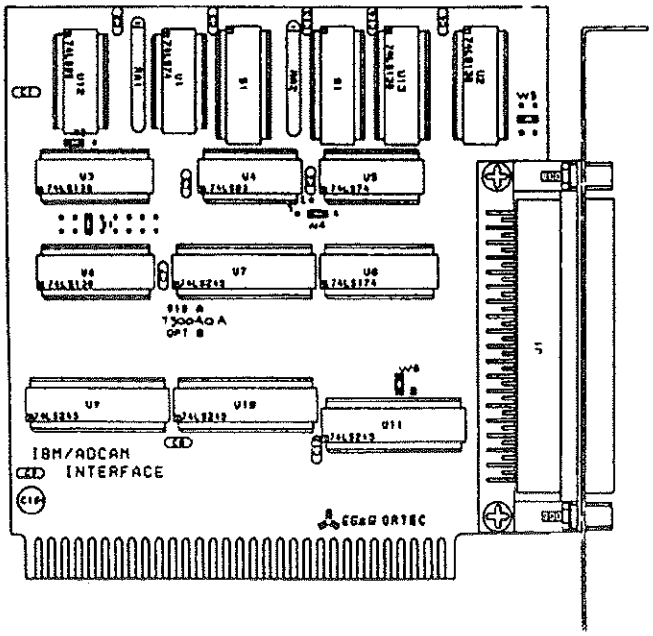

Fig. F.1. Component Assembly for 918-OPT B.

918A-OPT E Modifications for 919/92X Compatibility

The 918A-OPT E interface board is the adapter board placed in MICROCHANNEL BUS computers (IBM Models 50, 60, and 80). The 918A-OPT E interface board has one jumper on it labeled W1. When the board is viewed with the cable connector to the right, the jumper should be on the two left pins for compatibility with a Model 919 or 92X. If a 917, 918, or 918A is also attached to the interface the modifications in the section labeled 918A-OPT 5, MODIFICATIONS FOR 92X/919 COMPATIBILITY must be made to the Dual-Port Memory Cards in the 917, 918, or 918A.

918A-OPT 5 Modifications for 919/92X Compatibility

If a 917, 918, or 918A is to be used with a 919, 92X, or a 92X compatible Interface card, the 917, 918, or 918A Dual-Port Memory (918A-OPT 5, part number 601230), which is located inside the 917, 918, or 918A, must be modified for compatibility. These modifications have already been made on all Dual-Port Memory cards which were shipped after December 1, 1988, and thus these modifications are not required. However, a unit shipped before this date must be modified as follows:

1. Remove the Dual-Port Memory Assembly from the MCB. The Dual-Port Memory Assembly is a two-board assembly located in the expansion slots of the 917/918/918A. Remove the right side plate of the 917/918/918A to expose the expansion slots and remove the Dual-Port Memory assembly by pulling up on the assembly to disengage it from the row of pins on the main board.
2. Unplug the ribbon cable that goes to the rear panel from the header on the printed circuit board by pulling up on the header that connects the cable to the board.
3. Cut off pin 14 as close to the header as possible. Pin 14 is located in the row of pins nearest the edge of the board and counted from the top of the board. See Fig. F.2.
4. Replace the ribbon cable and reinstall the Dual-Port Memory assembly in the slot it was removed from in step 1.

All instruments shipped from EG&G ORTEC after December 1, 1988, will be compatible with both the 919/92X and the 917/918 family of MCBs and thus will not need modification.

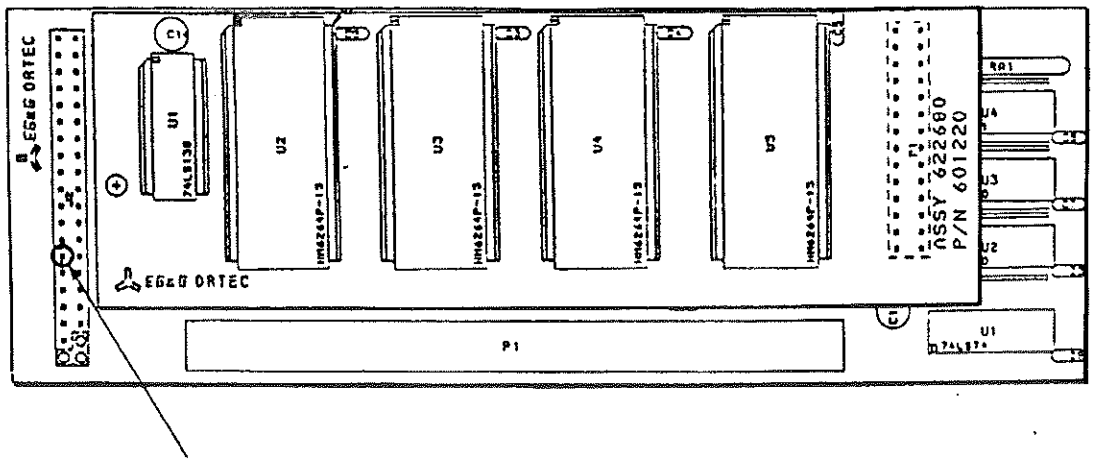

Fig. F.2. Revision to 918-OPT 5 for 92X Compatibility.

GLOSSARY

ACQUISITION
The process of collecting data from a detector and storing the data in memory. Model 919 MCBs can maintain independent acquisitions for each of its 4 devices simultaneously. Acquisitions are started by the START command and stopped by the STOP command.

ALARM RESPONSE RECORD
The response record that is sent to the host computer when one or more devices are stopped. The alarm responses can be independently enabled or disabled for either the serial line or mailbox communication paths.

ASCII
American Standard Code for Information Interchange. The ASCII code is defined by ANSI (American National Standards Institute) standard X3.4 - 1977. This standard describes the representation of characters as 8-bit binary numbers. This representation for characters is used by most mini and personal computers.

CHECKSUM
The sum of bytes in a record used to detect when communication errors occur.

CLOCK
A component of a device that keeps track of some form of time. Model 919/92X MCBs have live-time and truetime clocks for each device in the MCB.

COUNTER
Another name for a Model 919/92X clock (live-time or truetime).

DEAD TIME
The time that data acquisition is active but the MCB cannot process detector pulses (is dead). Dead time is equal to the truetime minus the live time for a device.

DEVICE
The entity within a Model 919 or 92X MCB that collects and stores spectral data. A device corresponds to the MCBs inputs. Model 919 MCBs have 4 inputs and thus 4 devices, while Model 92X MCBs have only 1 input and thus 1 device. A device can be started, stopped, cleared and selected.

GAIN PEAK
The group of channels specified for use by the digital spectrum stabilizer to correct for gain drift during spectrum acquisition.

GAIN STABILIZATION
The process of correcting for signal gain drift during spectrum acquisition.

GAUSS MODE
One of two modes of operation for the digital spectrum stabilizer in which Gaussian curves are fit to the gain or zero peaks on a periodic basis and the signal gain or zero offset are adjusted if necessary.

HOST
The computer that sends commands to an MCB and receives responses from the MCB either via the serial line or the mailbox.

LIVE TIME
The time that data acquisition is active and the MCB is capable of processing detector pulses (is live). Live time is equal to the truetime minus the dead time for a device.

MAILBOX
A portion of the Model 919/92X shared memory that is used for communication with a host computer by techniques discussed in Appendix A, Shared Memory Interface.

POINT MODE
One of two modes of operation for the digital spectrum stabilizer in which a minute adjustment to the signal gain or zero offset is made for each count that falls within the specified gain or zero peak.

PRESET

A limit set for a clock or region-of-interest count that if exceeded during an acquisition will cause the acquisition to stop. Model 919/92X MCBs have live time, truetime, ROI integral, ROI peak, and overflow presets for each device in the MCB.

PROGRAM MEMORY

The ROM memory inside the Model 919/92X MCB that contains the microprocessor instructions and fixed data that control the operation of the MCB. This memory is divided into ROM1 and ROM2 as referred to by the selftest operations.

RAM

Random Access Memory.

RECORD

A sequence of related bytes. Model 919/92X command, percent and dollar records are composed of printable ASCII characters and end with an ASCII carriage return.

ROI CHANNEL

A channel that has the ROI flag set.

ROI FLAG

A set of internal MCB flags (one for each channel) which, when set, identifies the channel as being part of the region-of-interest. All channels in a device that have the ROI flag set are considered when ROI integral or ROI peak presets are evaluated.

ROM

Read-Only Memory.

SCRATCHPAD MEMORY

The RAM memory inside the Model 919/92X MCB that is used for various overhead operations. The scratchpad memory is all the memory that is not used for storage of spectral data or mailbox communications.

SERIAL LINE

The RS232-C Serial interface that can be used to communicate with a host computer.

SEGMENT

A subdivision of a device. Segments are not implemented on Model 919/92X MCBs and are referenced only for compatibility with other MCBs.

SELFTEST

A test of internal MCB components initiated by the TEST command or MCB power-up.

SHARED MEMORY

A block of RAM memory that is shared by the Model 919/92X MCB and the host computer. This memory contains the spectral data for each device in the MCB as well as a mailbox used for communicating commands and responses. See Appendix A, Shared Memory Interface, for more information.

TICK

The minimum unit of time associated with a clock such as the realtime or live-time clocks -- A clock tick.

TRUETIME

The actual time that data acquisition is active regardless of the MCB's ability to process detector pulses. Truetime is also known as realtime.

WINDOW-OF-INTEREST

The continuous group of channels affected by commands like CLEAR, SET_DATA, and WRITE. The window-of-interest is set by the SET_WINDOW command, as well as by the SET_DEVICE and SET_SEGMENT commands.

ZERO PEAK

The group of channels specified for use by the digital spectrum stabilizer to correct for zero offset drift during spectrum acquisition.

ZERO STABILIZATION

The process of correcting for zero offset drift during spectrum acquisition.

INDEX

918A-OPT-5 52
918A-OPT-B 51
918A-OPT-E 52
918A-OPTION-B 5
918A-OPTION-E 6
Ac Line Voltage 5
Active devices 29
Adapter descriptor file 6
ADC 3
ADC GATE 4, 26, 32
Address space 15
Alarm responses 22, 29
AMPLIFIER 2
AMPLIFIER INPUT 4
AMPLIFIER OUTPUT 4
Amplifier Polarity 7
Automatic pole-zero 21, 49
Automatic Pole-Zeroing 22
Automatic PZ 35, 38
BASIC 41
Baud Rate 10
BIAS SHUTDOWN 8
BIAS SUPPLY 2
Bias Supply Polarity 7
Bias Supply Voltage 7
Change Sample 3, 39
Change Sample output 34
CLEAR 20
CLEAR_ALL 20
CLEAR_COUNTERS 20
CLEAR_DATA 20
CLEAR_PRESETS 20
CLEAR_ROI 21
Coarse gain 25, 31, 38
COMPUTER 21
Conversion gain 25, 31
Conversion Time 3
Data Bits 10
Data Memory 15
Date 30
Device number 30
Digital spectrum stabilization 50
DIGITAL SPECTRUM STABILIZER 3
DIP SWITCHES 11
DISABLE_ALARM 21
DISABLE_GAIN_STABILIZATION 21
DISABLE_HV 21
DISABLE_OVERFLOW_PRESET 21
DISABLE_PZ_AUTO 49
DISABLE_PZADJUST_AUTO 21
DUAL-PORT FANOUT 10
Dual-Port Memory Interface 5
ENABLE_PZ_AUTO 49
Fine gain 25, 31, 39
Firmware version 36
Fuse 5
Gain adjustment 30
Gain channel 24, 31
Gain peak stabilization 32
Gain stabilization 21
Gain stabilization adjustment 24
Gain width 32
Gauss mode 26
Gauss Mode Correction 50
High voltage 21, 22, 32
Integral 33
Integral preset 33
Livetime 20
Mailbox 15
Mailbox Protocol 16
MCB address 10
MCB number 9
MICROPROCESSOR 3
Overflow preset 21, 22, 34
Parity 10
Parity Checking 10
PEAK 34
Peak Channel 34
Point mode 27
Point Mode Stabilization 50
Power-up 24
Radix 35
real time 28
Region-of-interest 21
REMOTE 21
REMOTE SHUTDOWN 4, 8
RESET 24
Resistive feedback preamplifier 22
Resistive feedback preamplifiers 49
ROI 34
ROI flags 27
RS-232-C 11
Sample changer input/output 4
Sample Ready 3, 33
Selected device 30
Serial port 10
Shaping time 27, 35
Shaping Time Constants 2
SHARED MEMORY INTERFACE 15
SHOW_INPUT 4
Spectrum stabilization 22
Stabilization mode 34
Stabilization preset 25, 29, 31, 37
Start date 24, 30
Start time 28, 36
START_PZ_AUTO 49
STEP_OUTPUT 4
Stop Bits 10

Time 36
Transistor reset 35
Transistor-reset 21
Transistor-reset preamplifier 21, 49
Transistor-reset preamplifiers 2
TRP INH 2, 8
TRP INHIBIT 4
Truetime 20
Version 36
Window-of-interest 20
Zero channel 37
Zero peak 28
Zero stabilization 21, 37, 38
Zero stabilization adjustment 28
Zero width 38